SOLO MODEL SAFS*-24
TECHNICAL DRAWING

SAFSP-24 POLISHED

SAFSB-24 BRUSHED

SAFSMB-24 MATTE BLACK

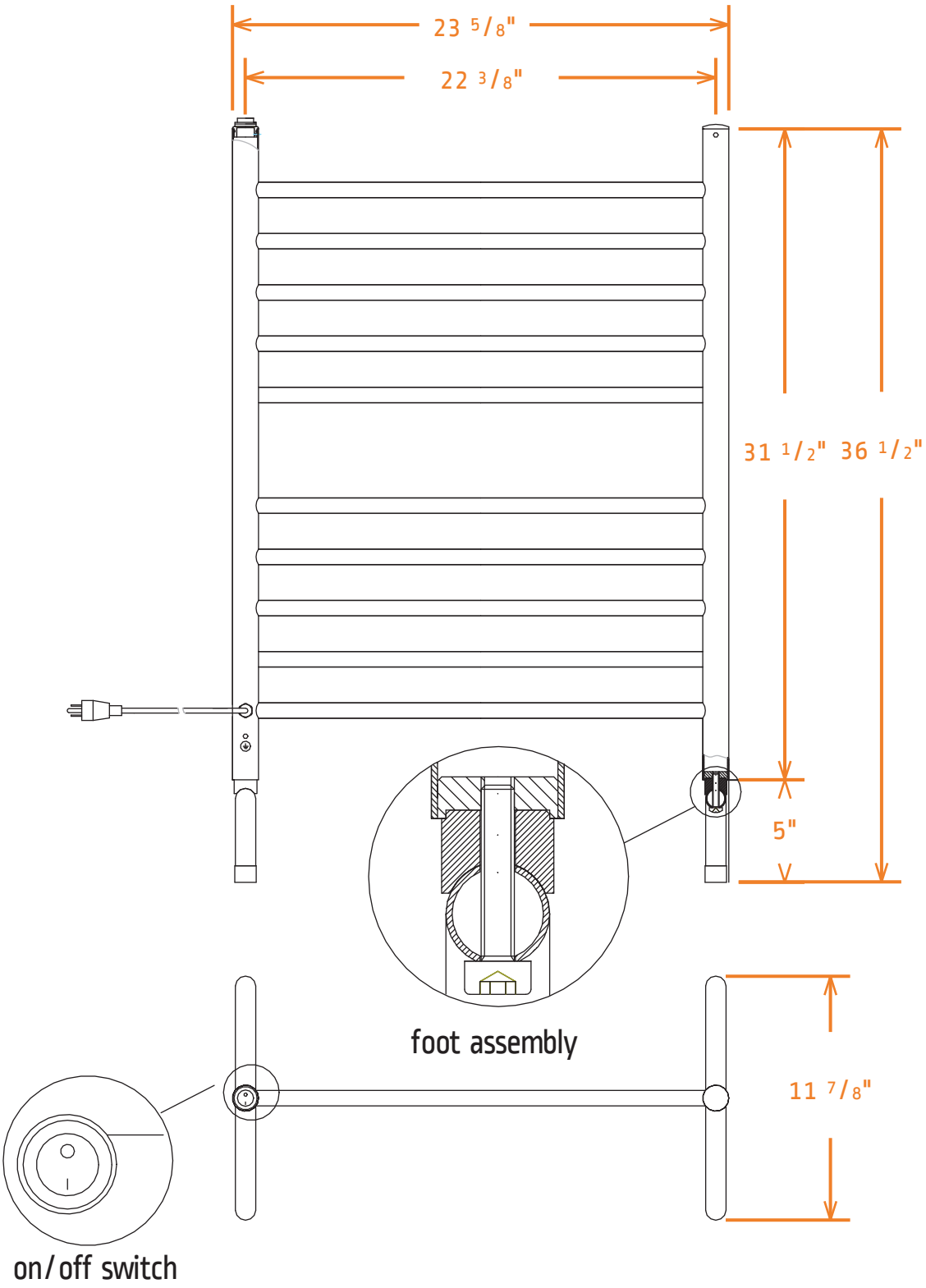

Amba HEATED TOWEL RACKS
www.ambaproducts.com

VOLTS: 110v
WATTS: 150
AMPS: 1.35

SOLO MODEL SAFS*-33
TECHNICAL DRAWING

SAFSP-33 POLISHED | SAFSB-33 BRUSHED | SAFSMB-33 MATTE BLACK

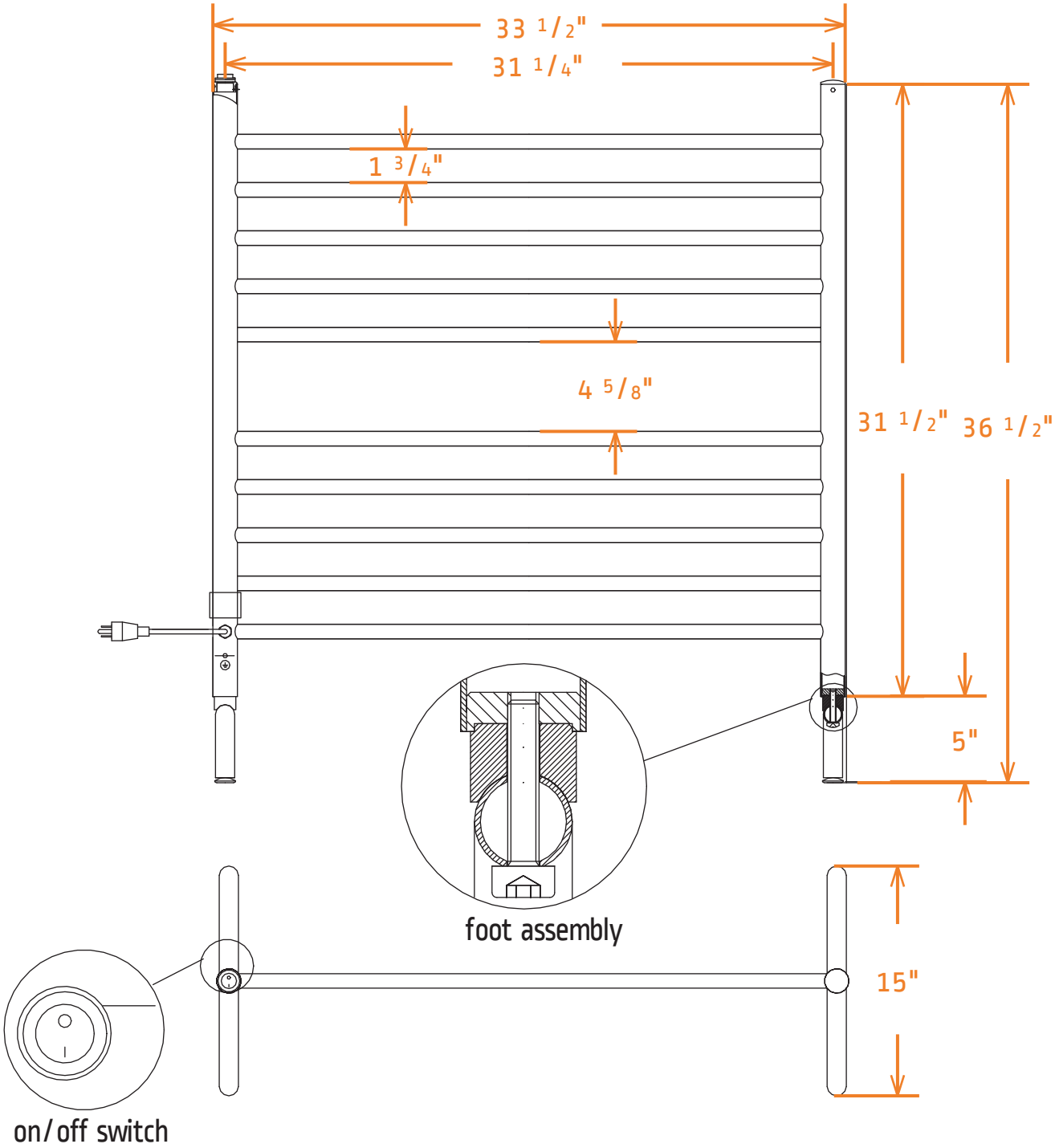

Amba HEATED TOWEL RACKS
www.ambaproducts.com

VOLTS: 110v
WATTS: 150
AMPS: 1.35