PROIII-750

PROIII Series Steam Generator

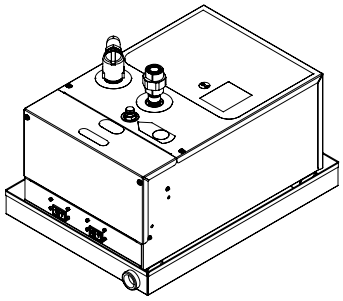

STANDARD EQUIPMENT

- Lifetime at Factory Warranty (Includes parts and labor)
- 2 year in-home warranty followed by lifetime warranty
- Patented SmartSteam™ on ProSeries™ The most desired feature in steam. Only from ThermaSol.
- Two Way Digital CAN-bus Technology Only from ThermaSol
- Auto PowerFlush™ pressurized inner tank cleaning system
- Superior heating elements - incoloy low watt density
- FastStart™
- 50' CAN-bus cable for the controller
- Works with ThermaSol Serenity Light, Sound, Rainhead
- Split tank design
- Constant steam at a constant rate; no steam lag or burst
- Can be plumbed up to 50 ft. from the shower
- Stainless steel construction
- Services residential rooms up to 750 cubic ft. with one steam unit
- Stainless steel drain pan
- Pre-plumbed safety relief valve
- 1/2" union to connect to steam line
- Braided stainless steel water connector

SCAN FOR INSTALLATION GUIDE

SCAN FOR CAD FILES

INSTALLATION NOTES:

Install this generator according to the supplied installation guide. Follow local plumbing and electrical codes. Unit must be accessible.

Generator is factory sized: L x W x H = Cubic Feet. Choose the appropriate generator. For every additional foot of ceiling height over 8 ft, use the next larger generator. Always round up when calculating the total cubic feet.

SPECIFICATIONS:

Input Voltage	208-240VAC Single Phase
Kilowatt Rating	20.0
Maximum Amperage	92 AMPS
Water Inlet	3/8" Compression
Steam Outlet	1/2" NPT
Drain Pan	3/4" NPT
Safety Valve	Pre plumbed
Electrical connection	Hardwired
Maximum Room Size (cubic Feet)	750

COMPATIBLE OPTIONS:

- Thermatouch Series
- Signatouch Series
- Microtouch Series
- Signature Control Series
- Easy Start Series
- Wellness Packages
- Digital Shower Packages
- Serenity Light and Music series
- Hydrovive series

PRO SERIES III ULTIMATE

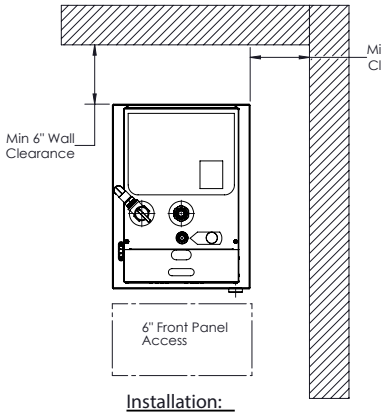

Installation:

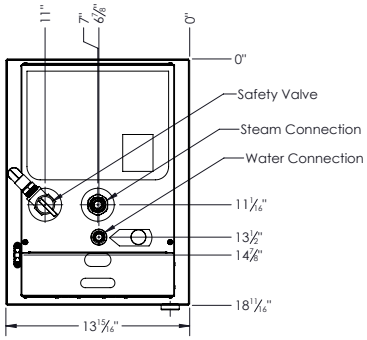

Top:

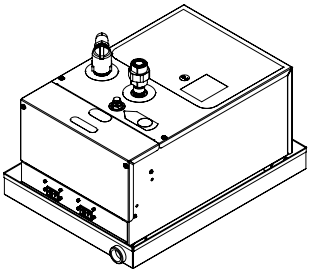

SHIPPING DETAILS

Weight	48 lbs.
Length	18 in.
Width	23 in.
Height	14 in.

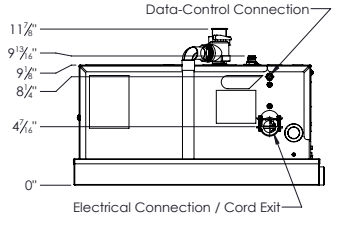

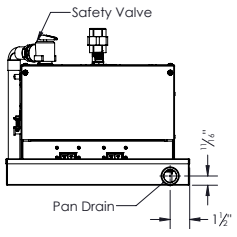

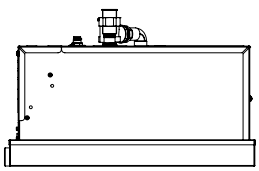

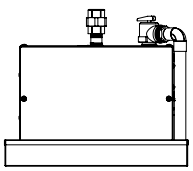

Back: