HARVIA

THERMASOL
Shower | Steam | Sauna

Ventura sauna cabin - Installation instructions



Table of contents VENTURA-sauna cabin		
Sauna cabin		
Wall-elements	Info	Quantity
A1		1 pc
A2		1 pc
B1		1 pc
B2		1 pc
C1		1 pc
C2		1 pc
Back steel profiles		
Back profile L (LEFT)	ZVEL-720	1 pc
Back profile R (RIGHT)	ZVEL-721	1 pc
Roof element(s)		
R1		1 pc
R2	if depth bigger than 1200mmm	1 pc
Front steel profile		
Front profile L (LEFT)	ZVEL-730	1 pc
Front profile R (RIGHT)	ZVEL-731	1 pc
Back corner covers		
Left back corner cover		1 pc
Right back corner cover		1 pc
Corner trims		2 pcs
Benches		
Lower bench 1		1 pc
Lower bench 2	layout dependent	1 pc
Upper bench 1		1 pc
Upper bench 2	layout dependent	1 pc
Upper bench 3	layout dependent	1 pc
Bench support(s)		
Standard benc support(s)	layout dependent	
Back rest(s)		
Back rest 1		1 pc
Back rest 2	layout dependent	1 pc
Back rest 3	layout dependent	1 pc
Glass front		
G1	Next to door with hinges	1 pc
G2	Next to door	1 pc
D	Door glass	1 pc
UG	Upper glass above the door	1 pc
Hinges	SAZ0602 (RG-932)	2 pcs
Door handle	SAZ045, chrome	1 pc
Threaded rod	KT021	1 pc
Magnet holder	ZVEL-500	1 pc
Counter part for magnete	ZVEL-501	1 pc
Magnet	SAZ048KPL	1 pc
Glass supporting leg	SAZ064M	4 pcs
LIGHTING		
Sauna lamp white	SAS21060T	1 pc
RGBW-LED tubes	layout dependent	4 pcs
Power 90W (24V)	layout dependent	1 pc
Power 160W (24V)	layout dependent	1 pc
RGBW LED funk driver CV 24V		1 pc
RGBW LED remote unit 1 zone		1 pc
Ventilation		
Ventilation tunnel, steel	ZVEL-740	1 pc
AIR Ventilation slider, black	4021101	1 pc
Accessories		
Installation instructions		1 pc
Screws	layout dependent	

A1 Wall element

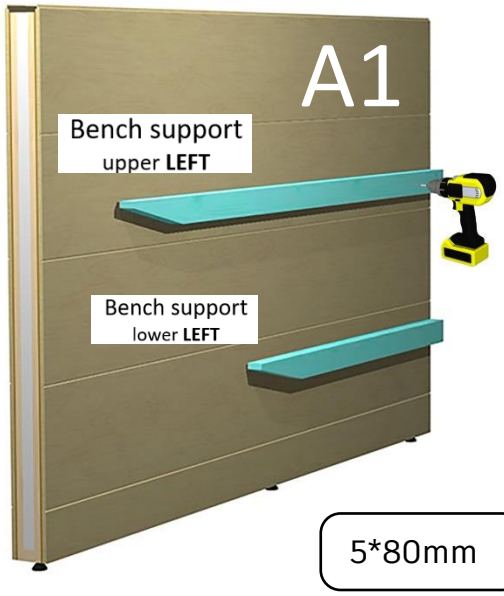

C1 Wall element

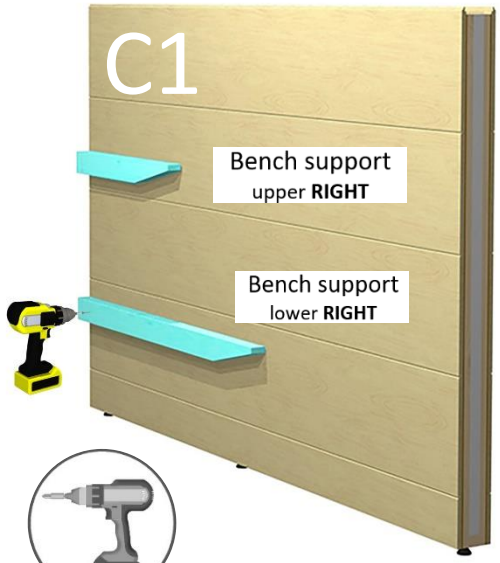

5*80mm

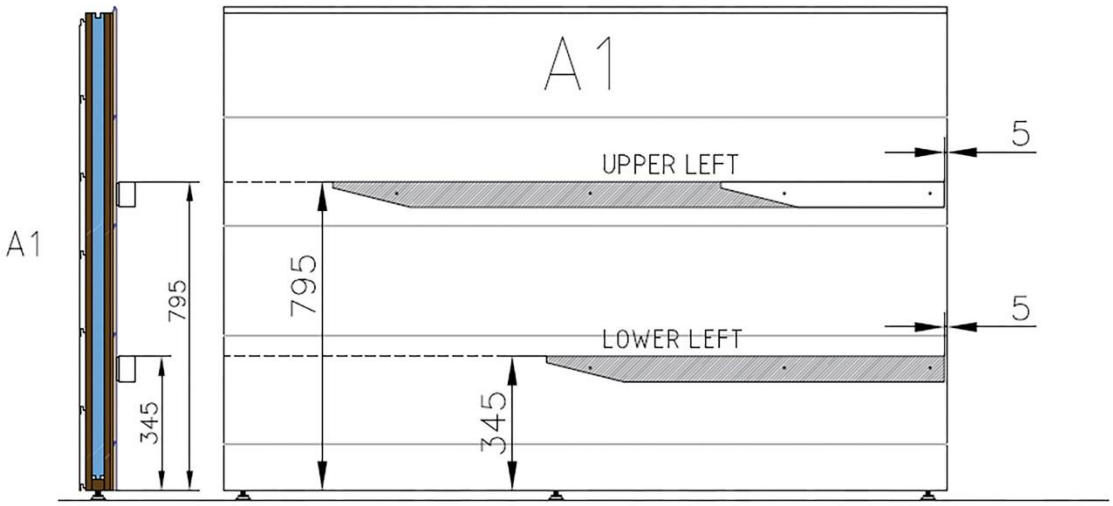

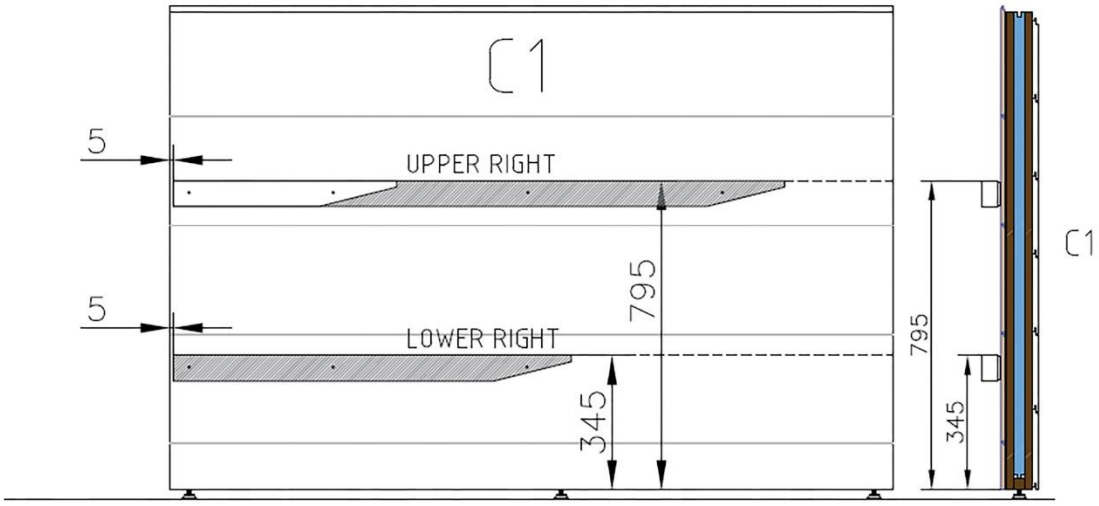

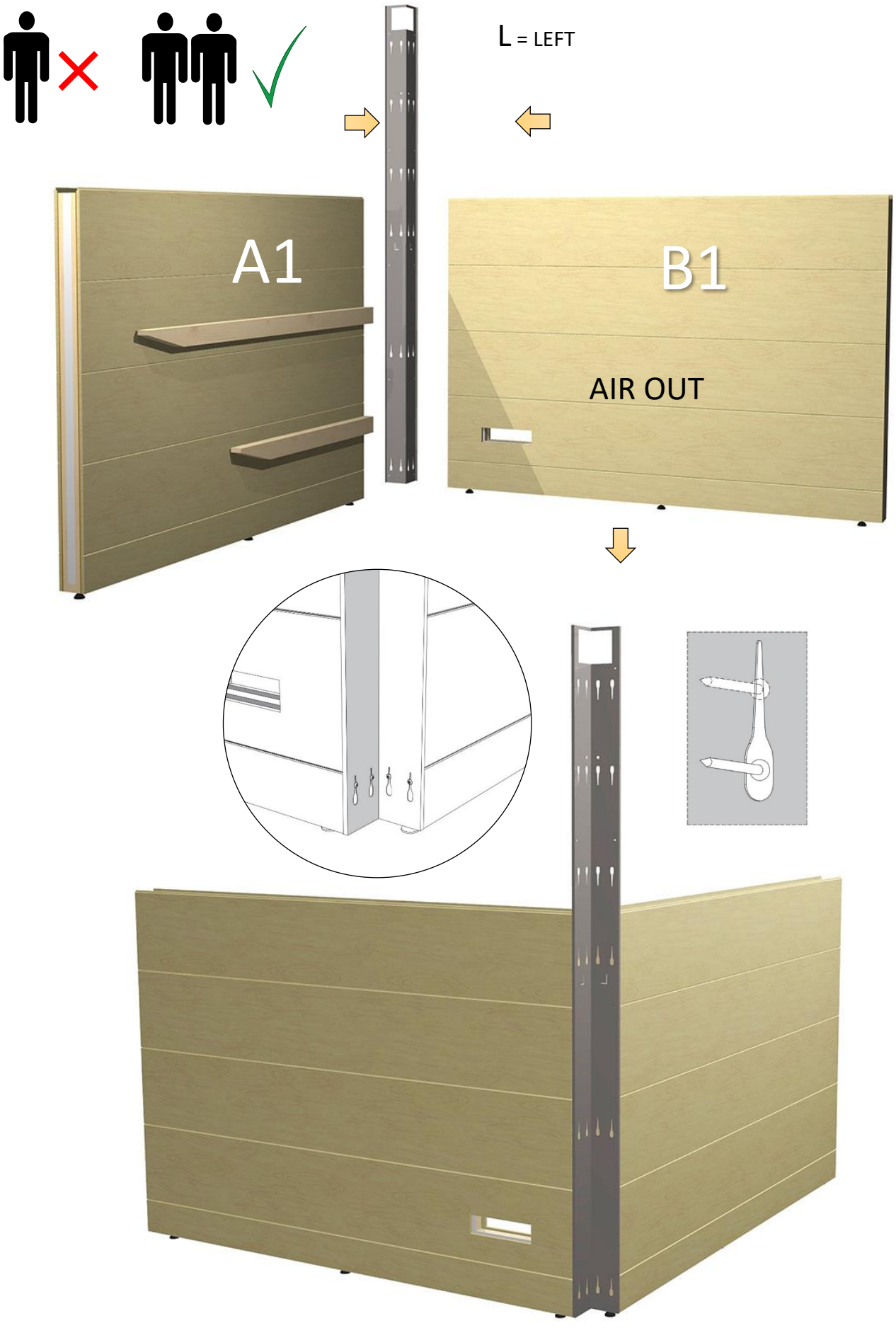
L = LEFT
A1
B1
AIR OUT

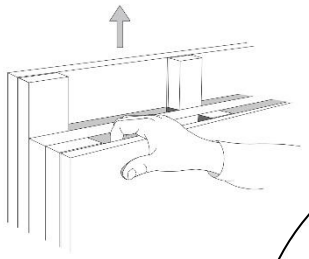

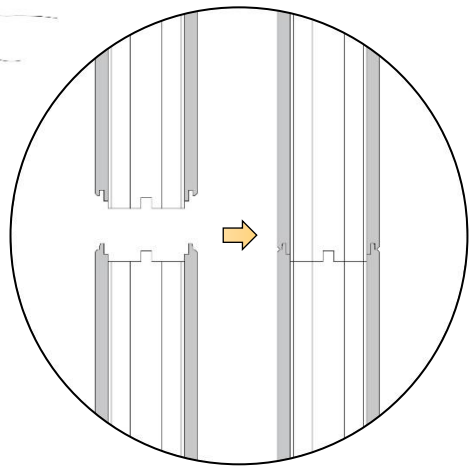

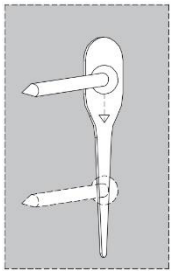

A2



R = RIGHT

B2

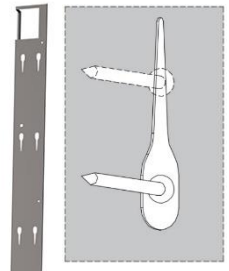

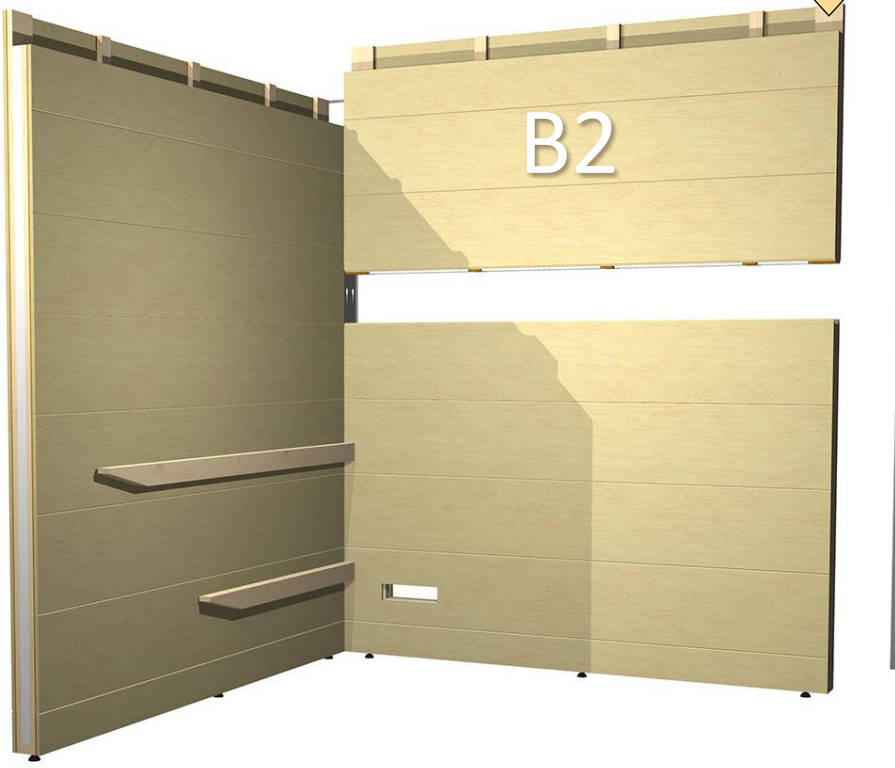

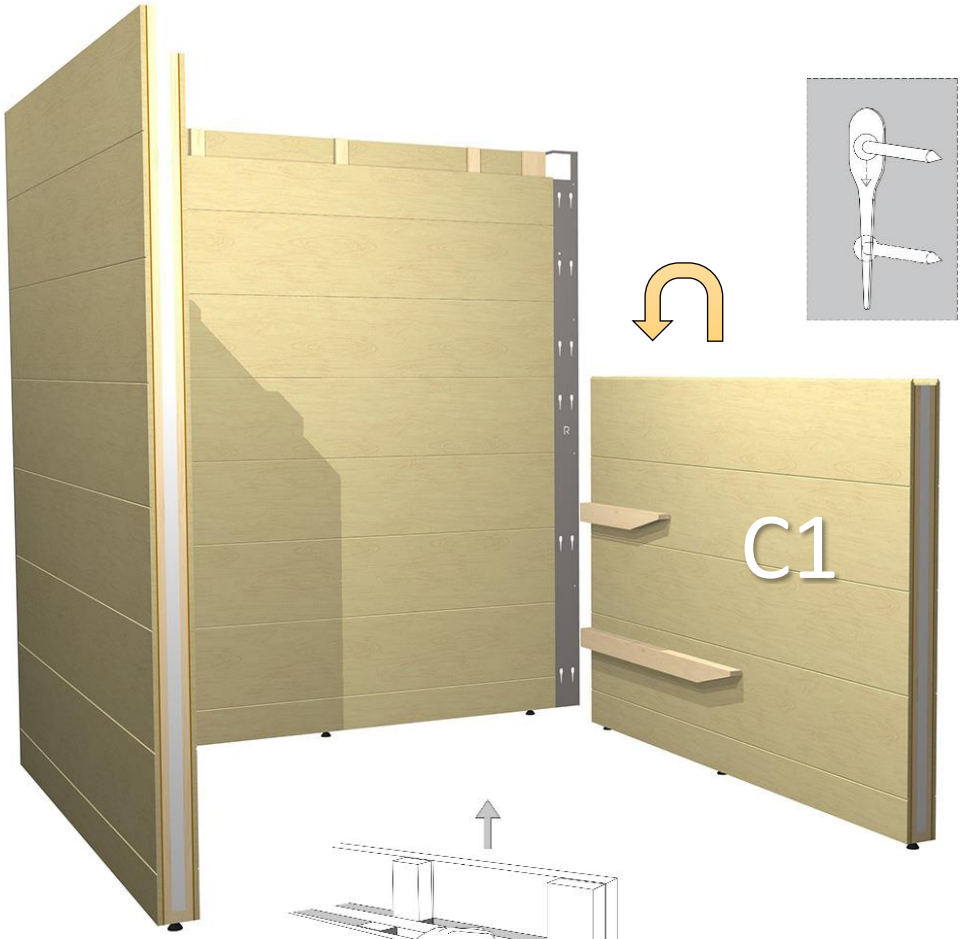
C1

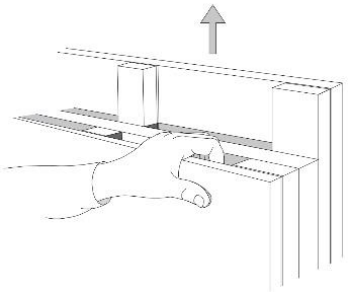


C2

R = Roof

R1

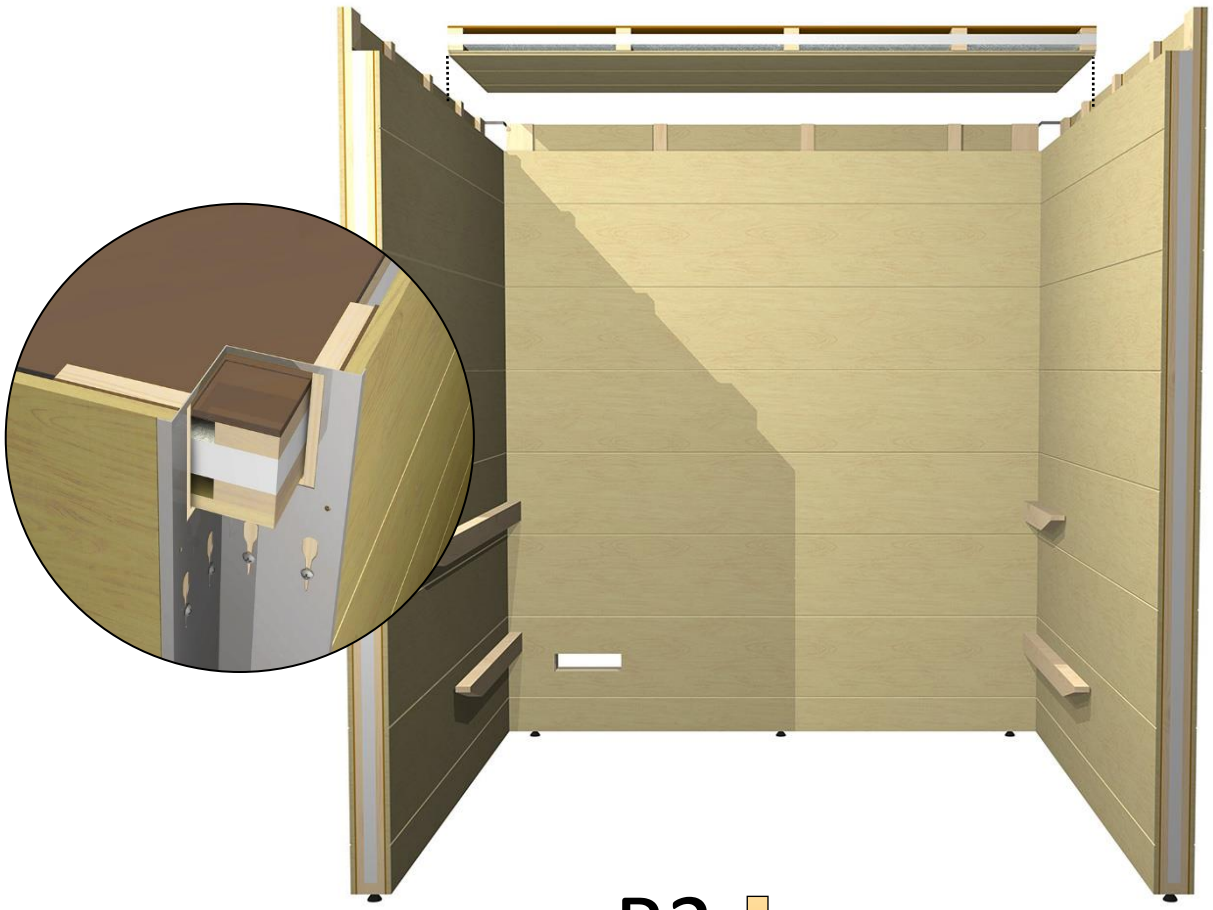

R2

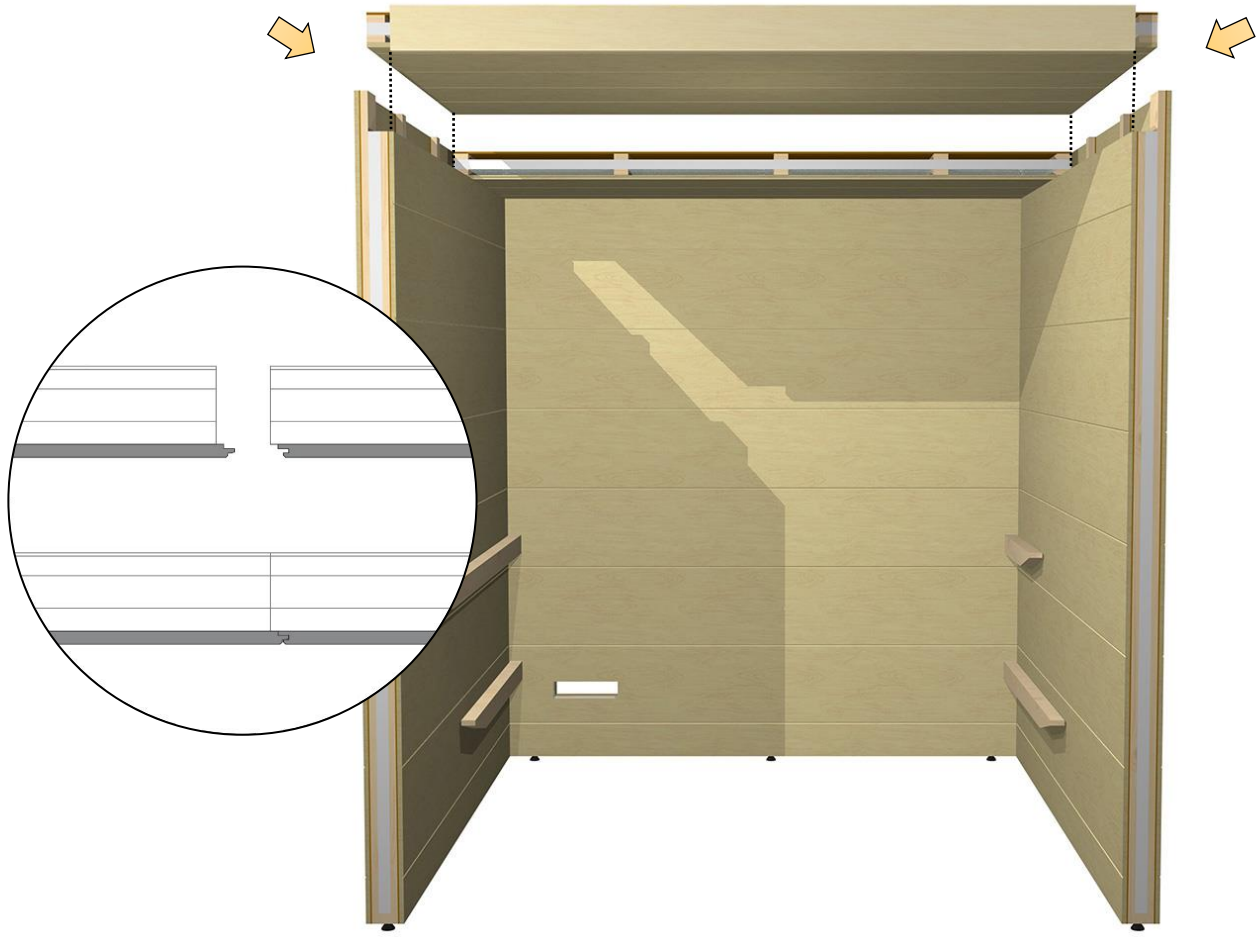

L = LEFT

R = RIGHT



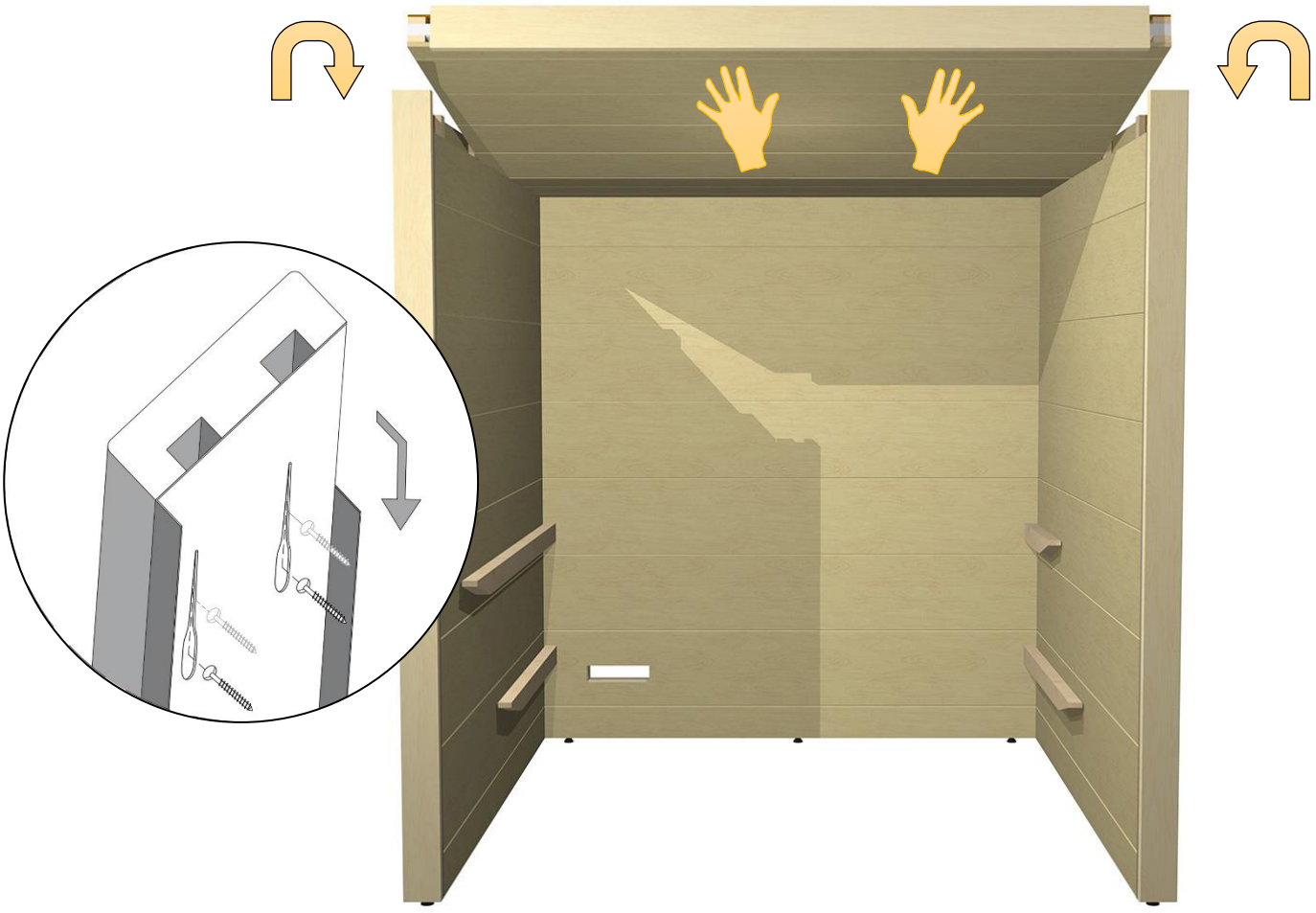

4,5*60mm

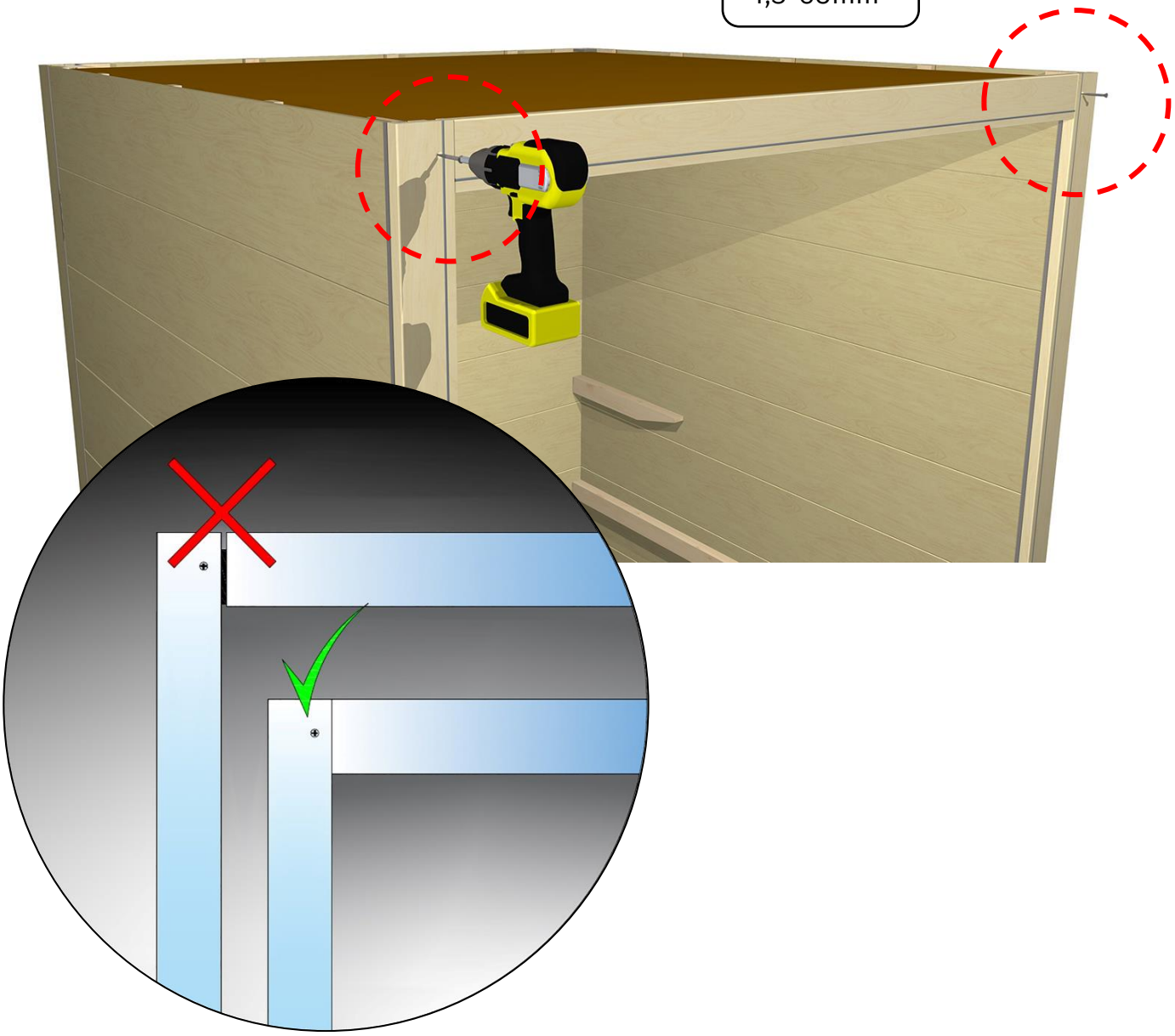

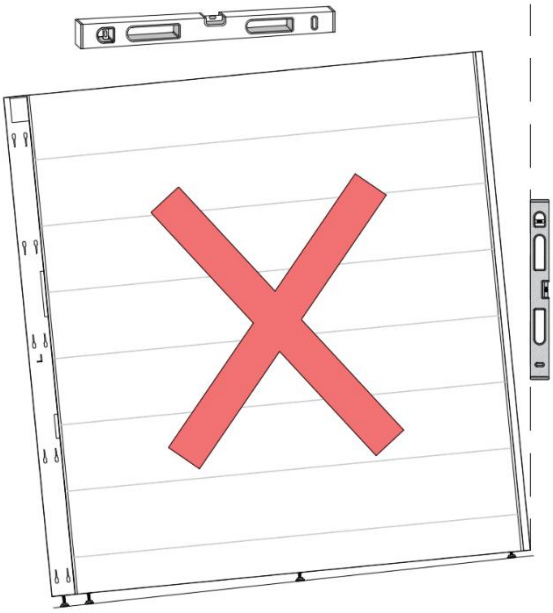

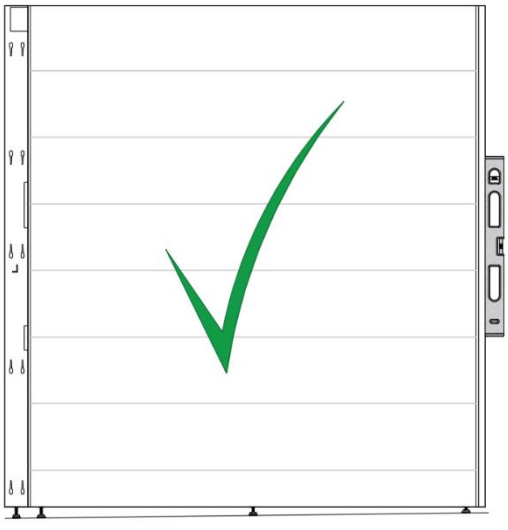

AIR OUT

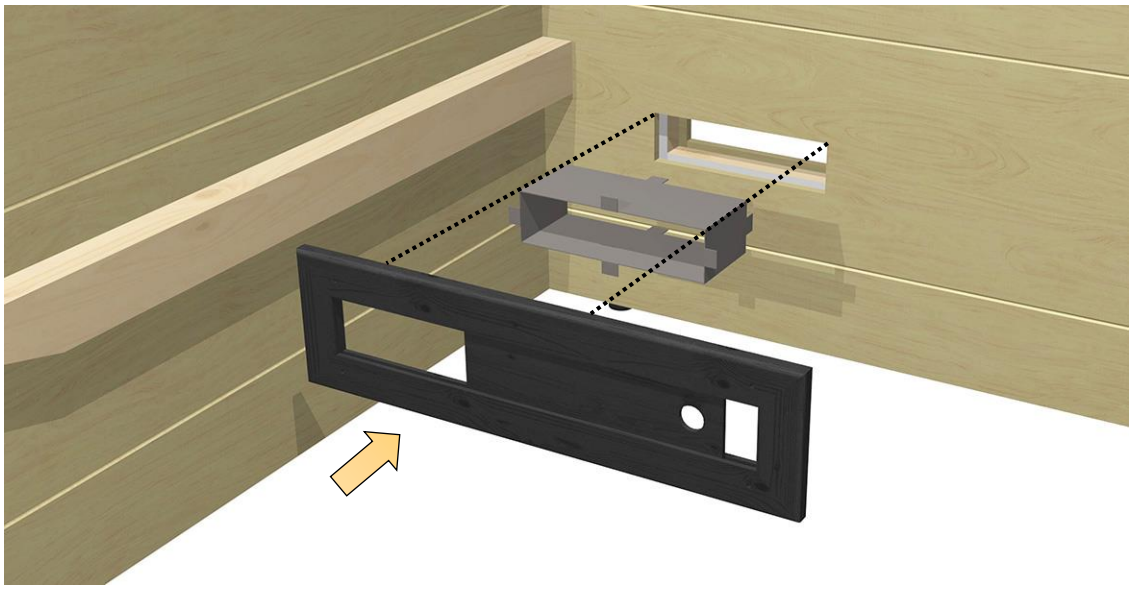

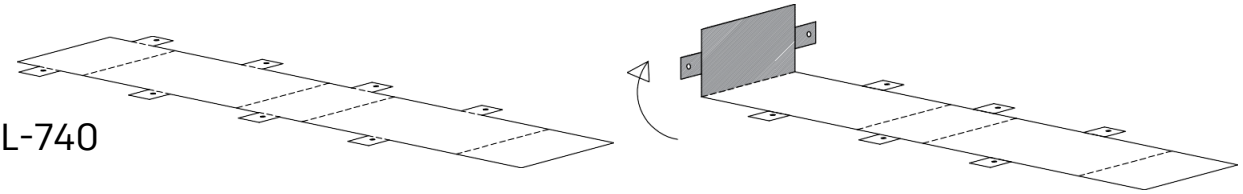

ZVEL-740

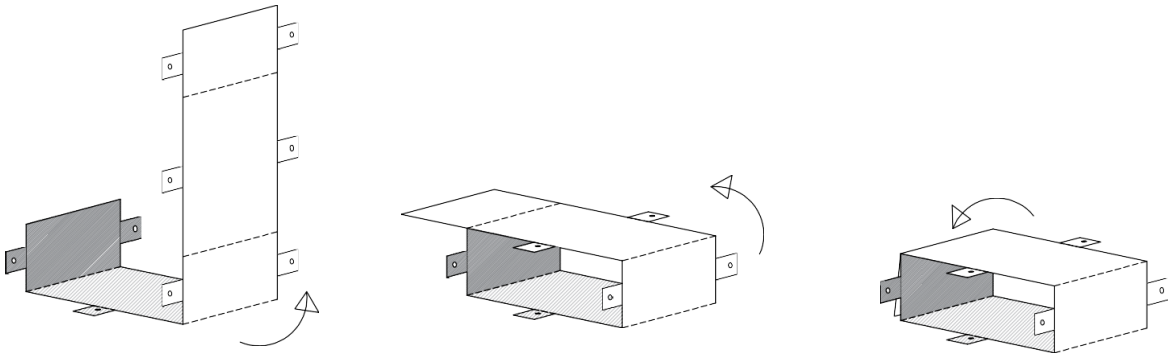

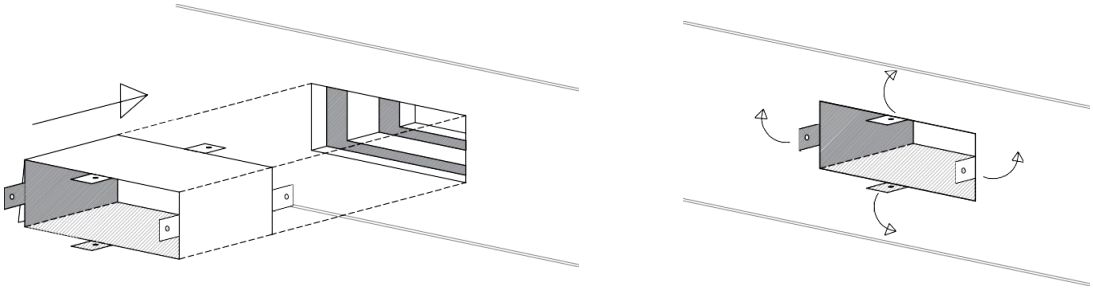

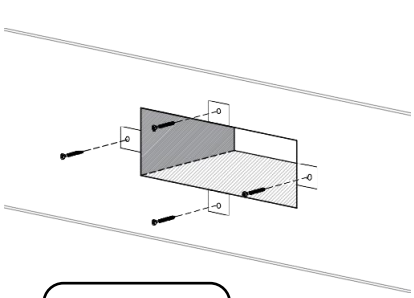

4021101

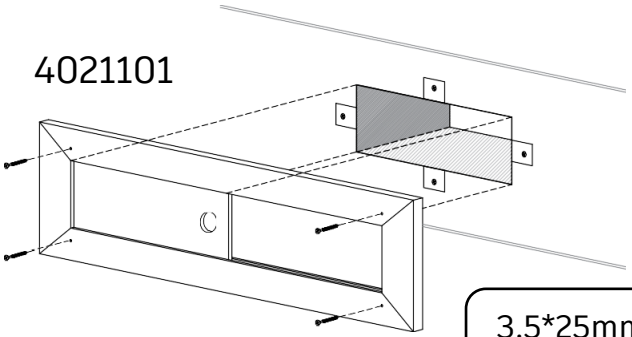

3*12mm

3,5*25mm

BENCHES





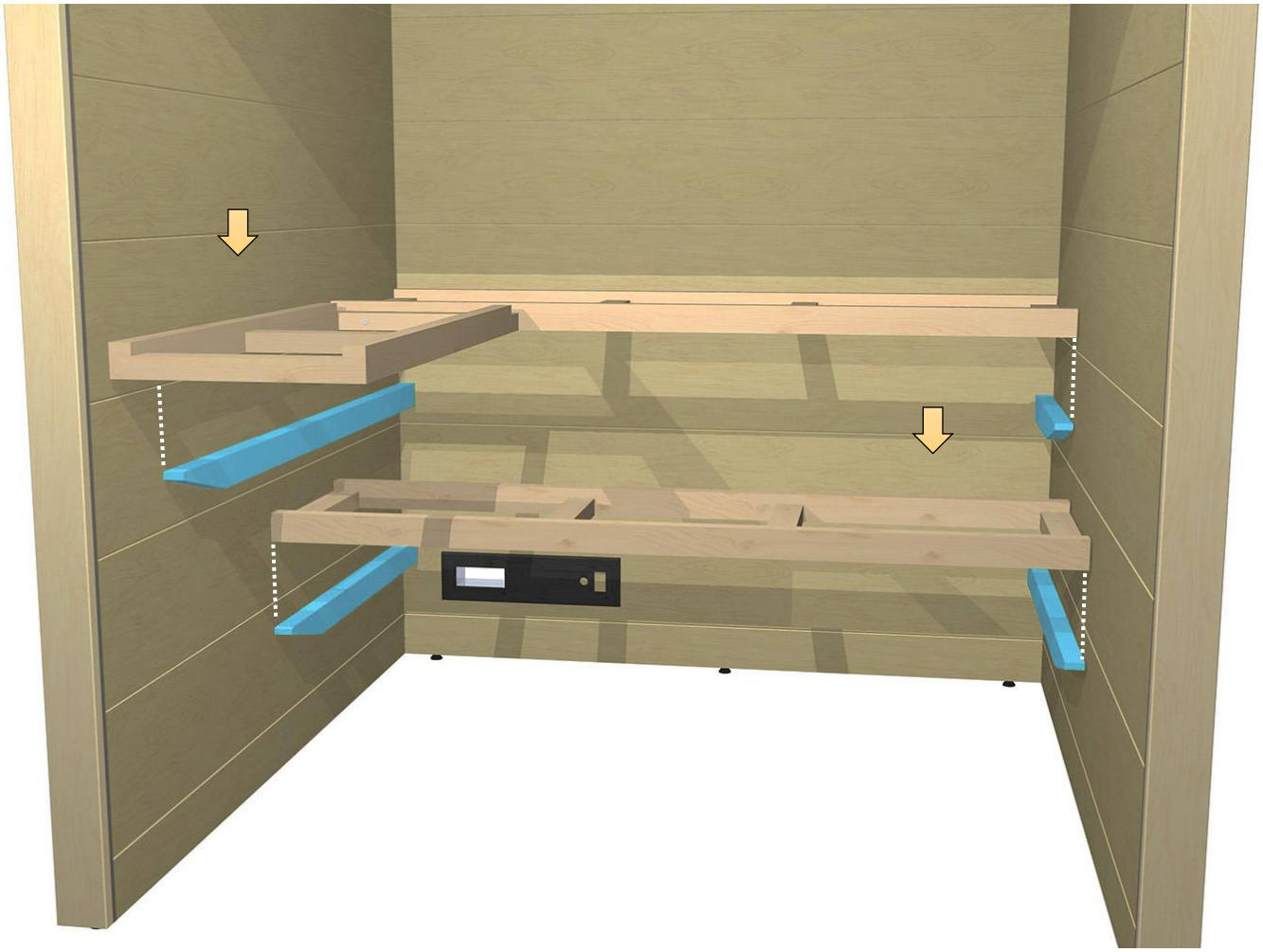

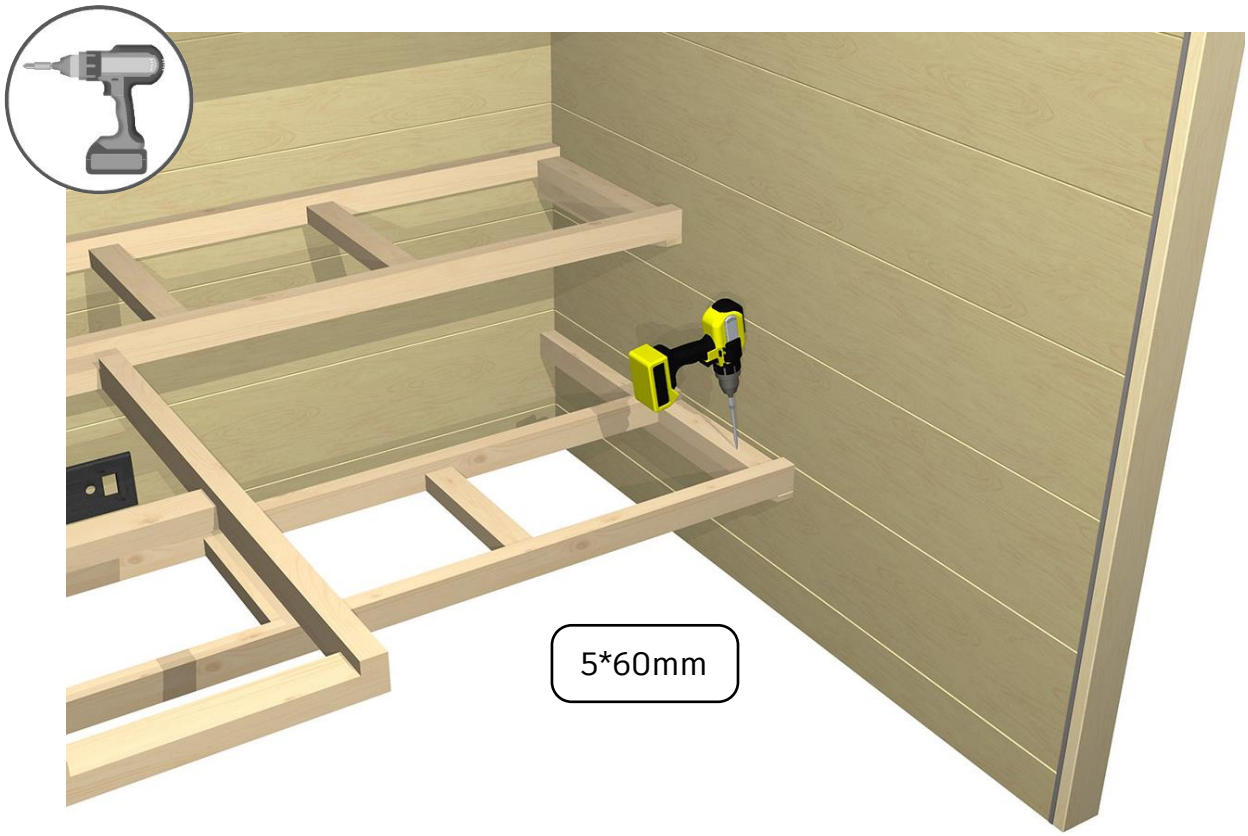
5*60mm

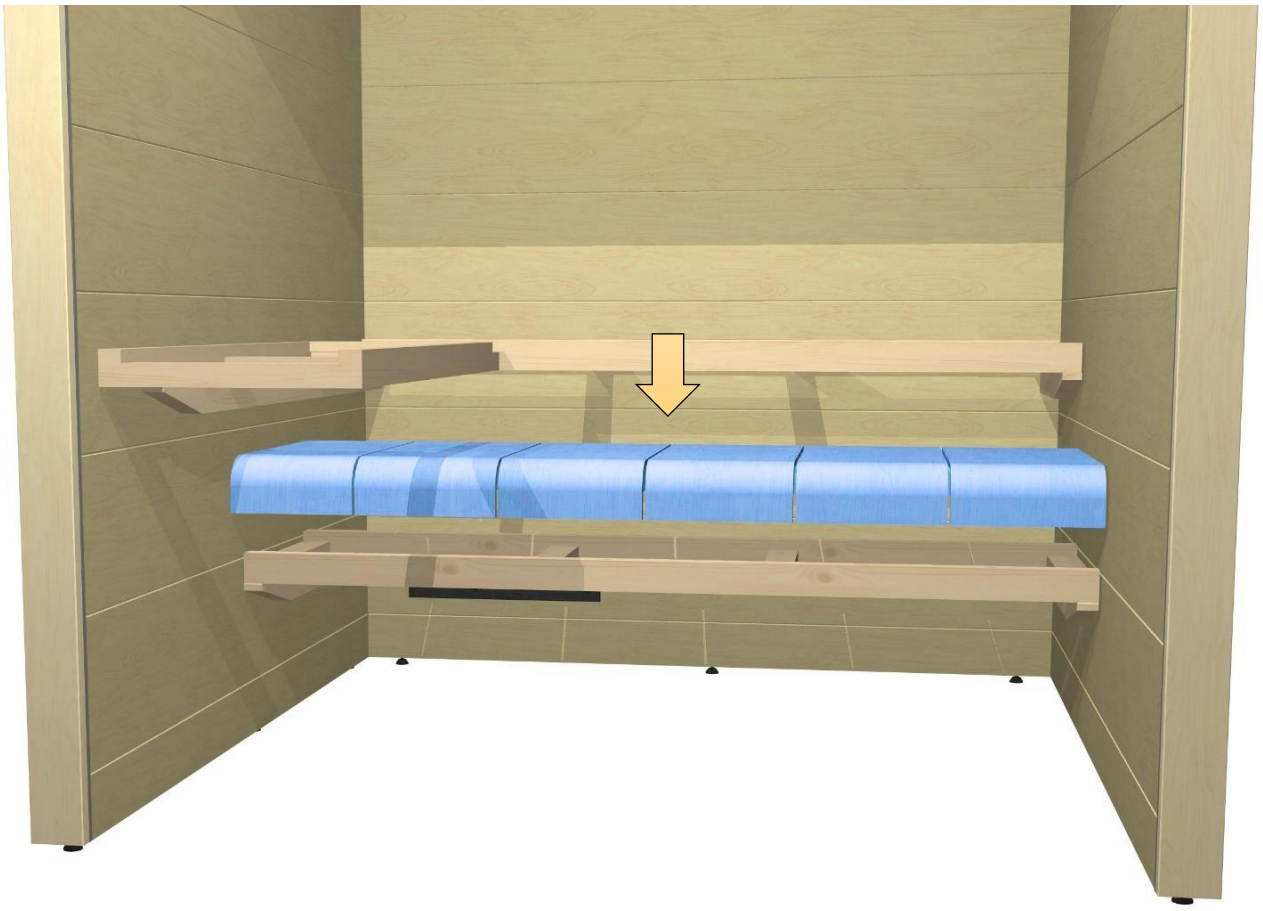

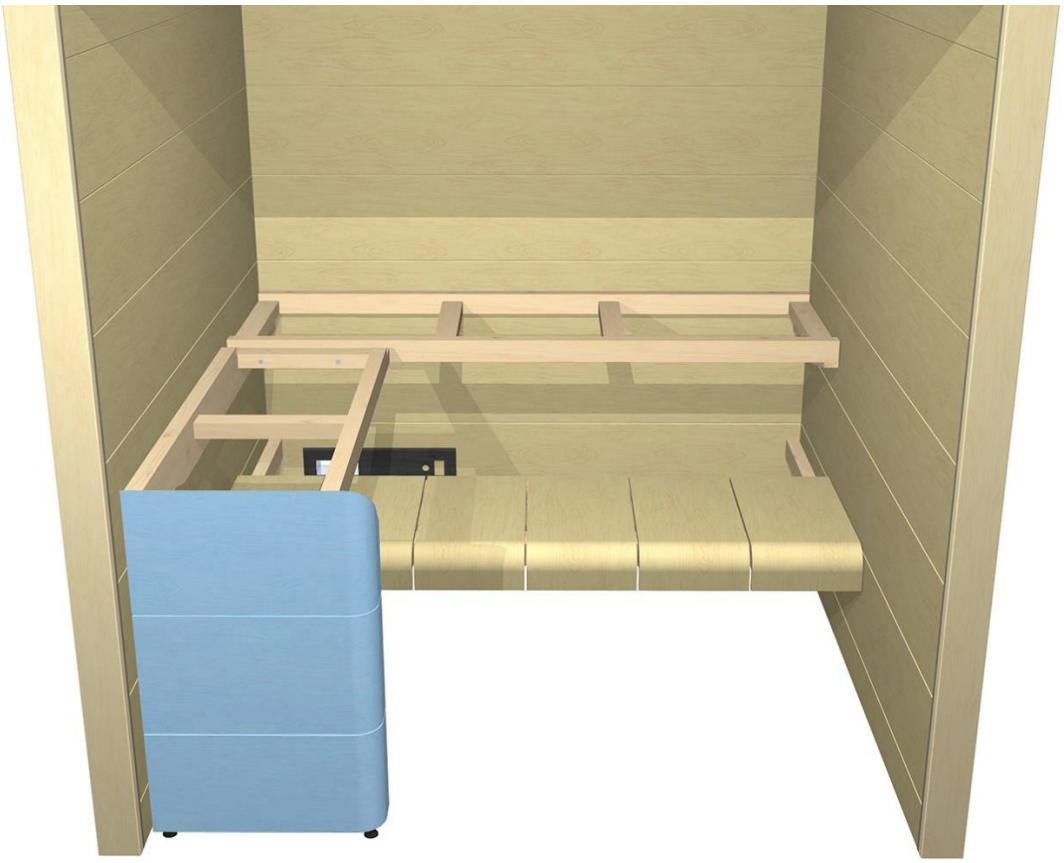

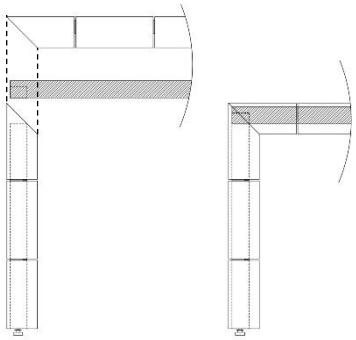

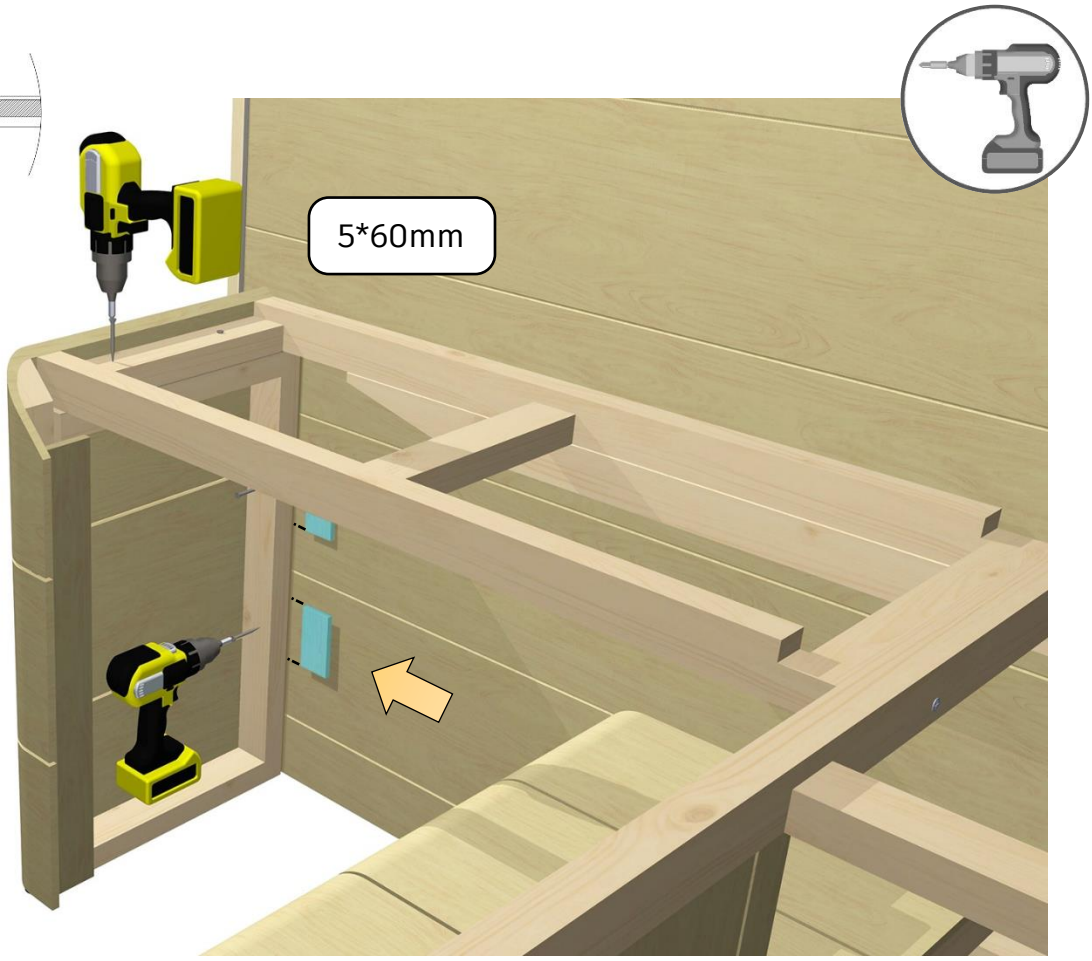
5*60mm



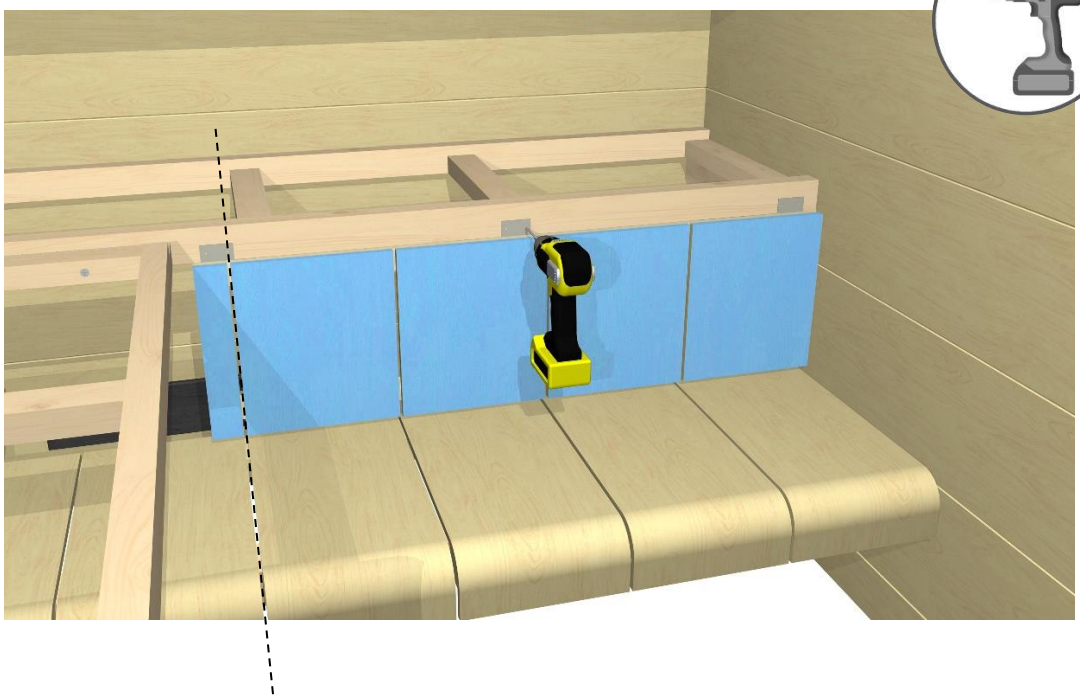
3,5*25mm

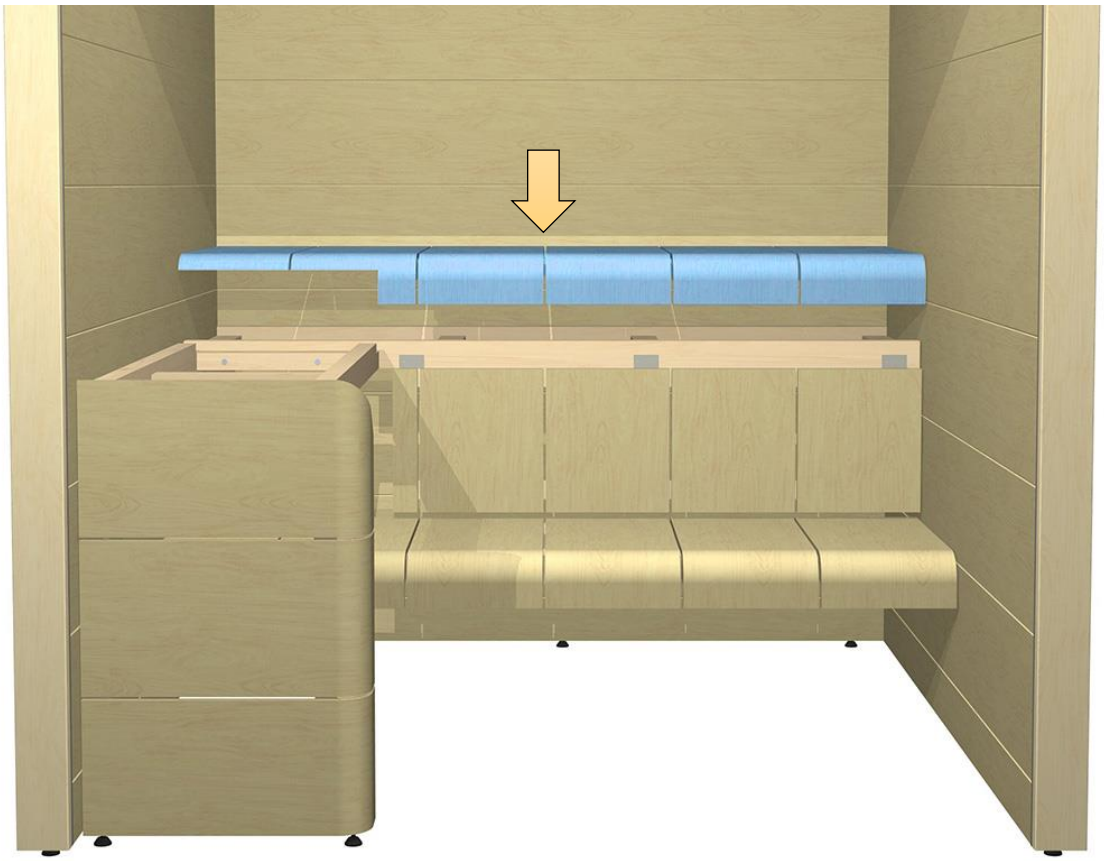

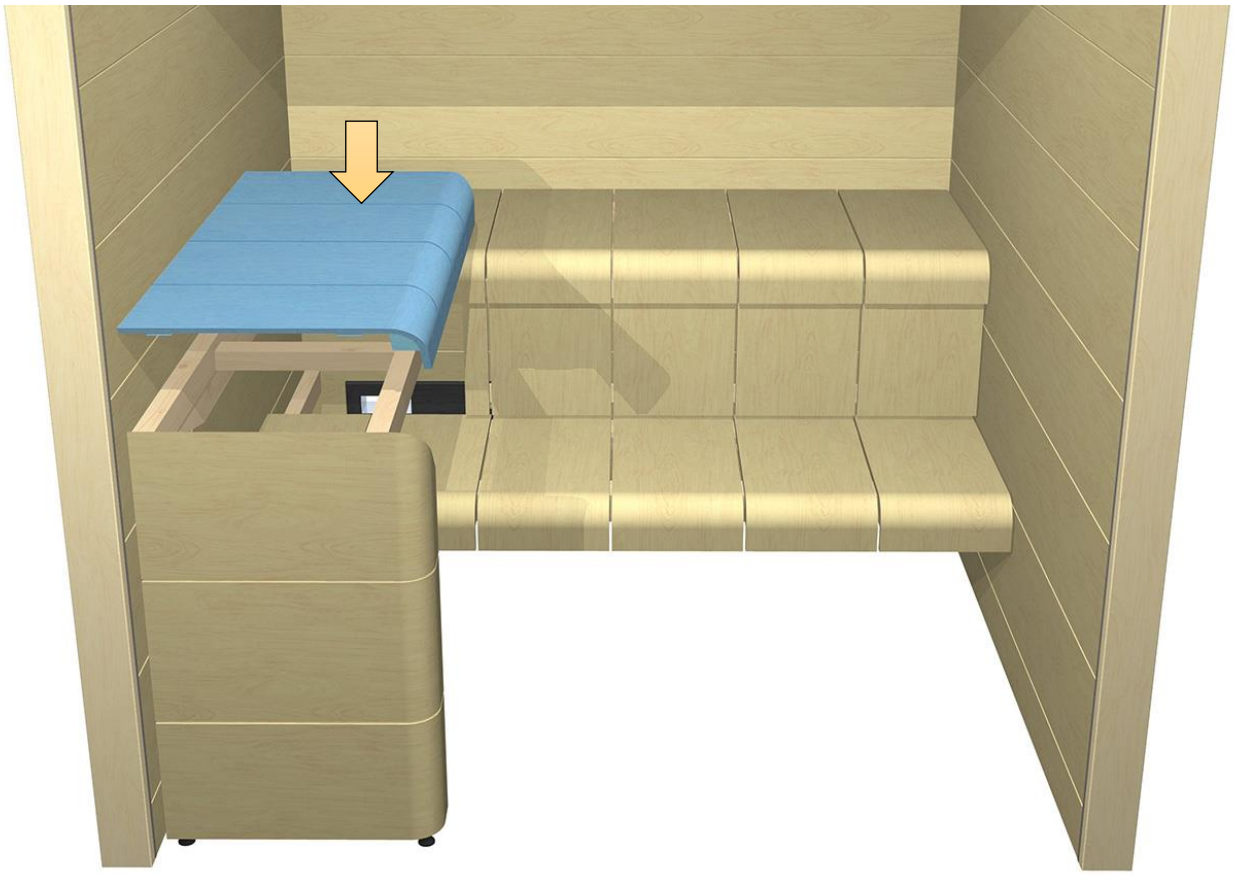

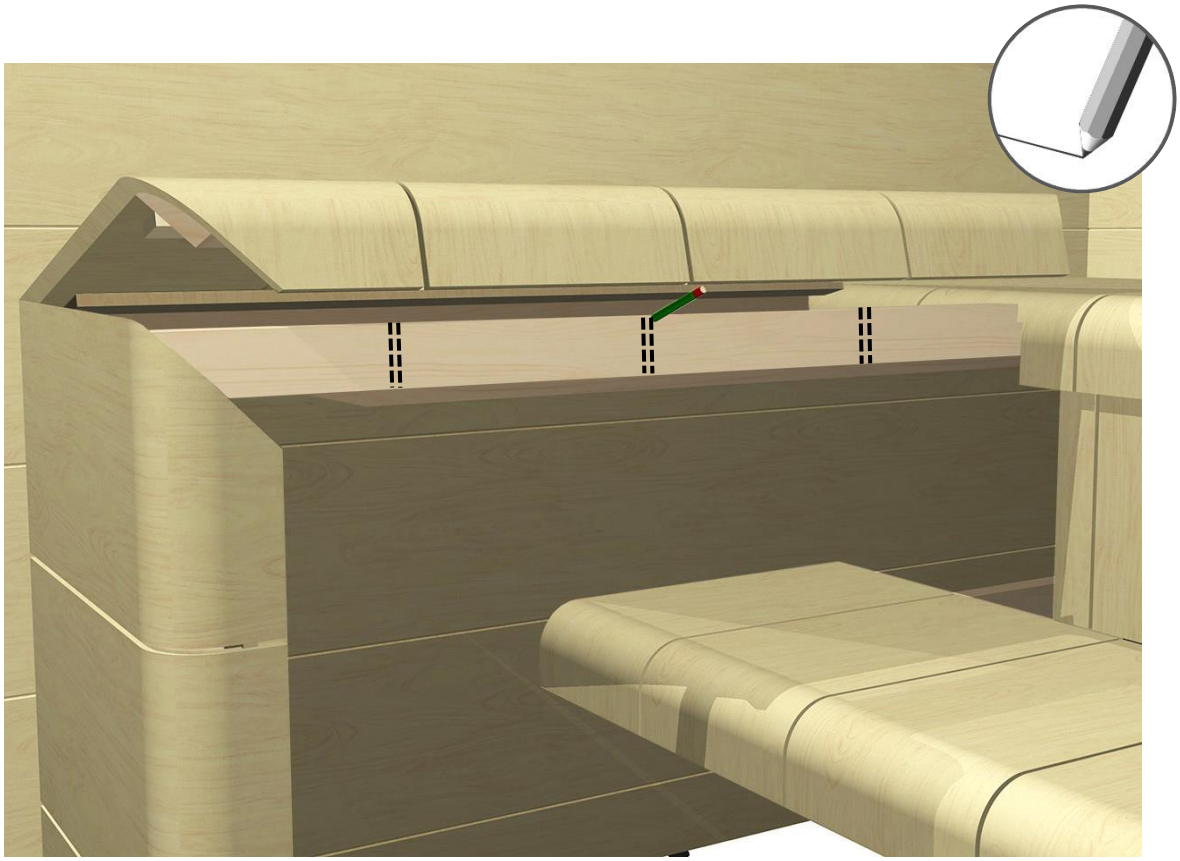

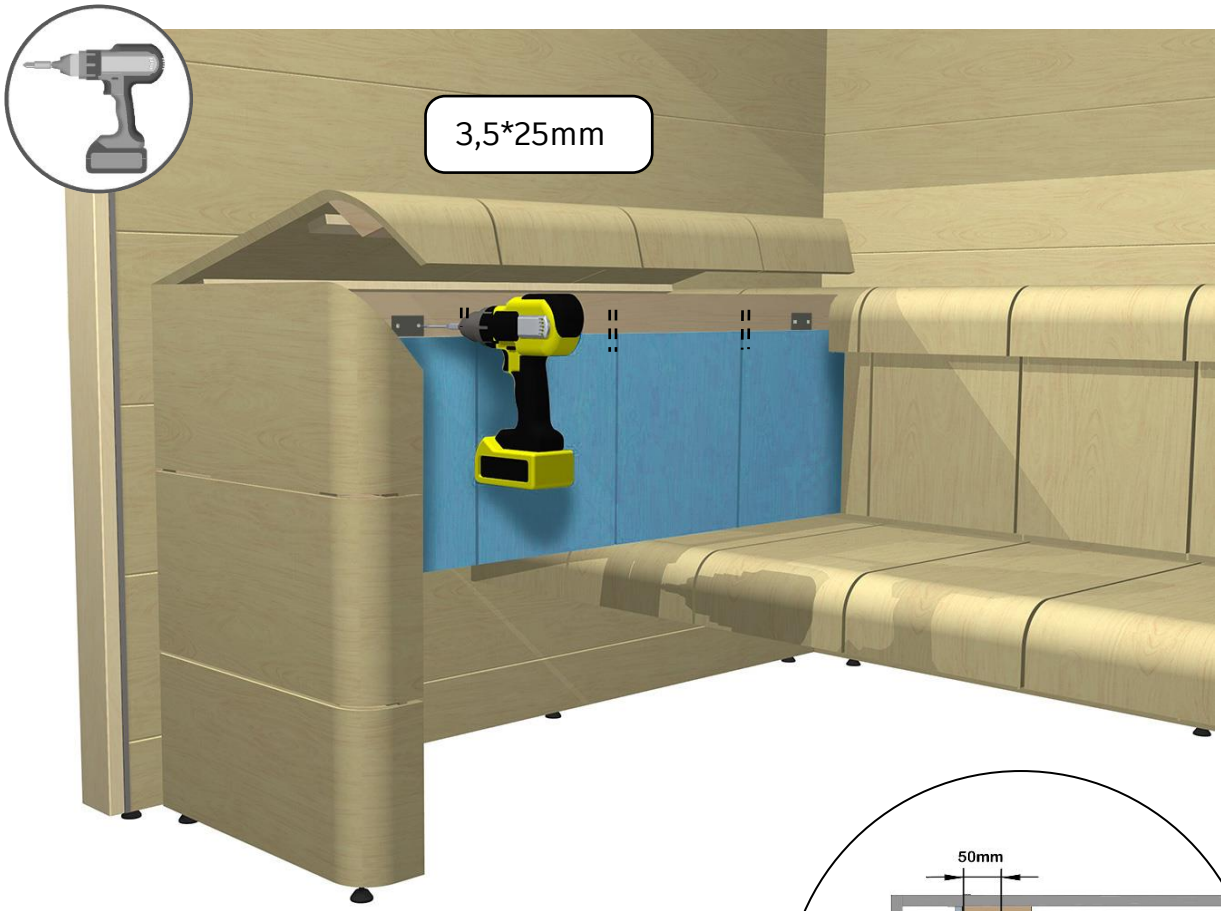
3,5*25mm

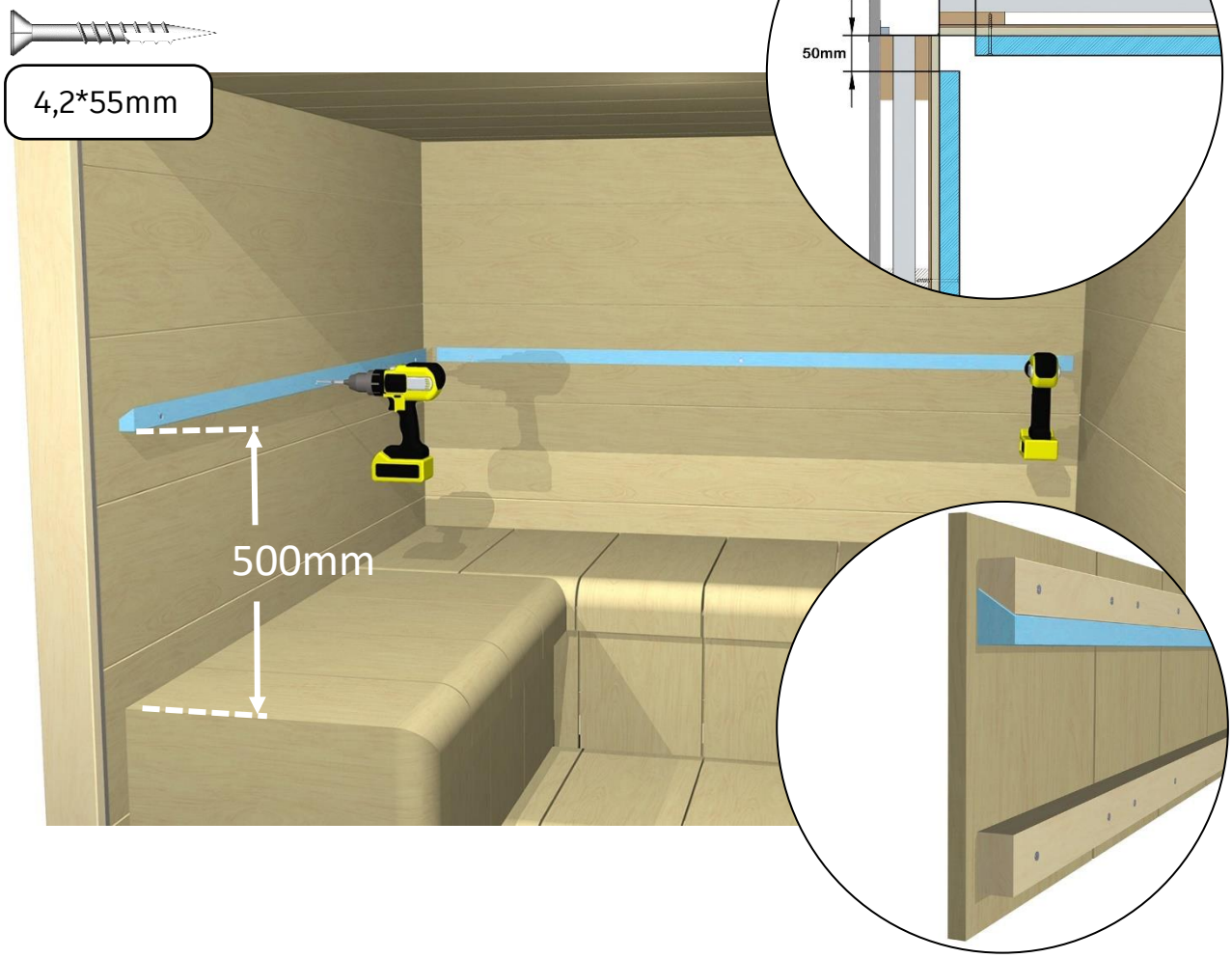
4,2*55mm
50mm
50mm
500mm

LED LIGHTS

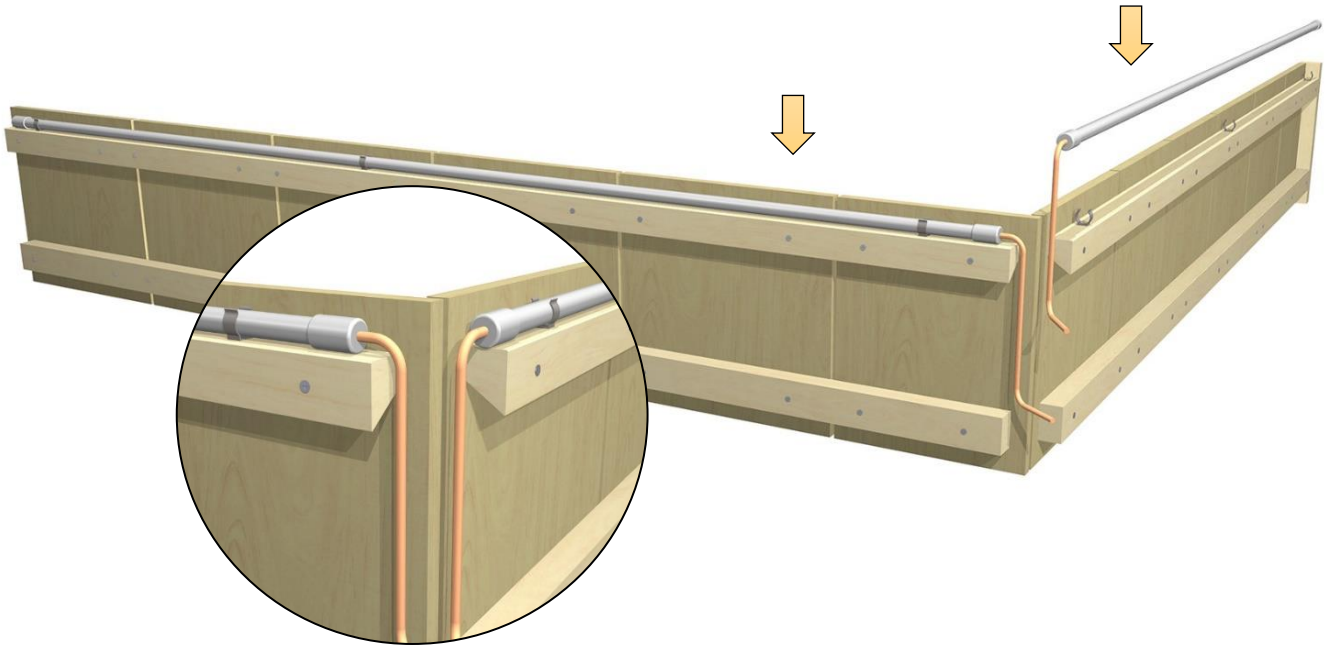

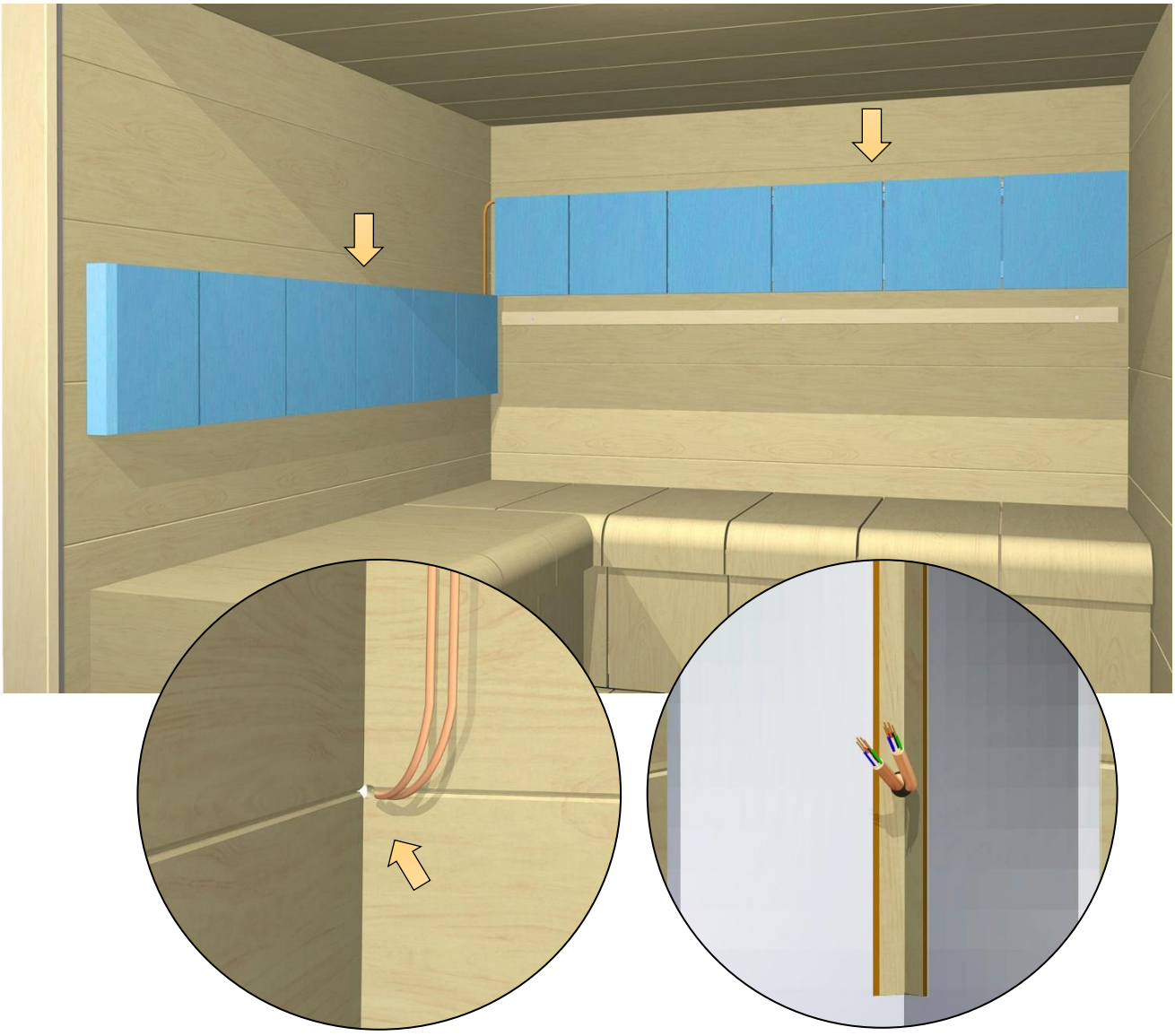

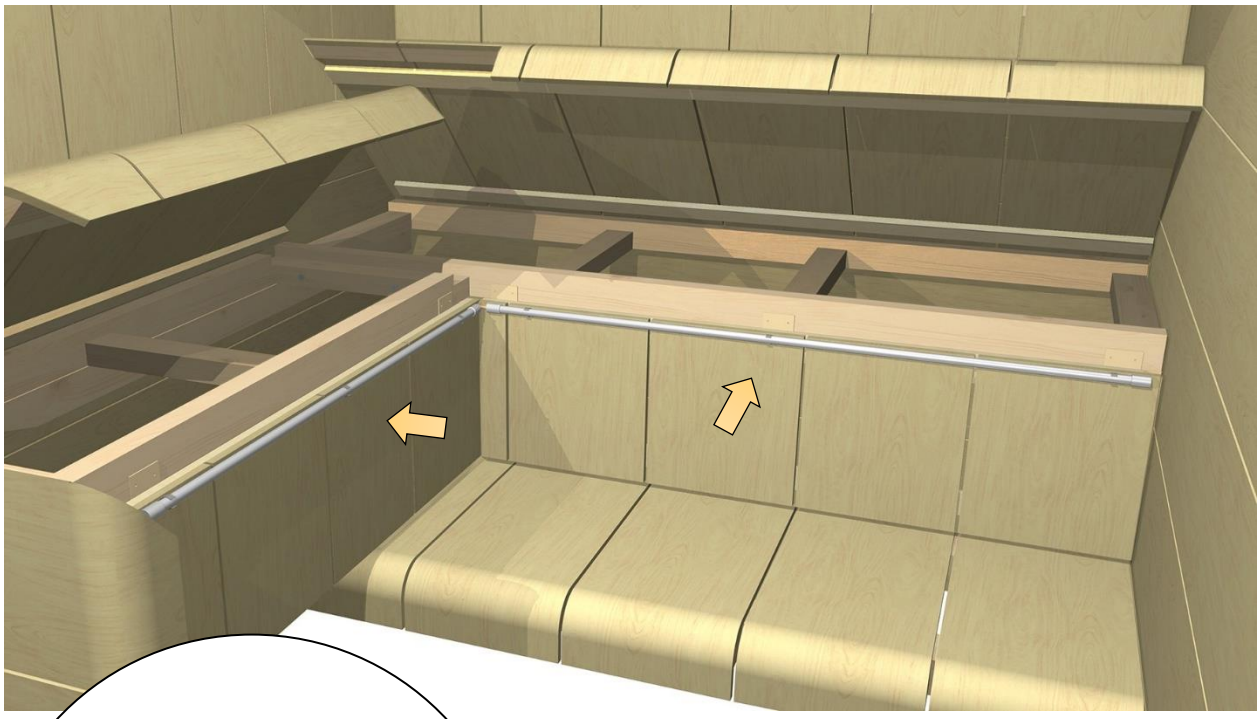

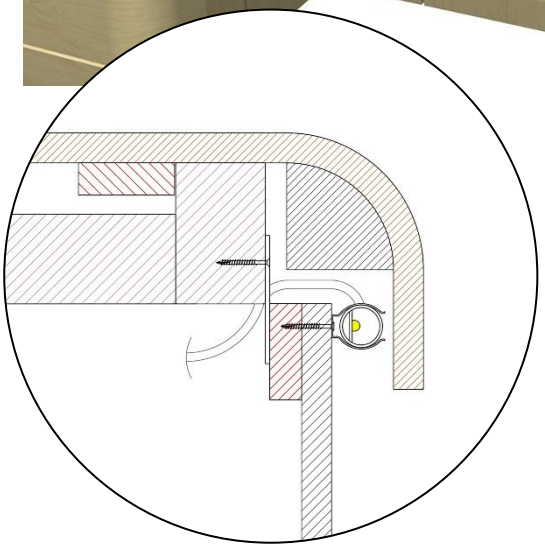

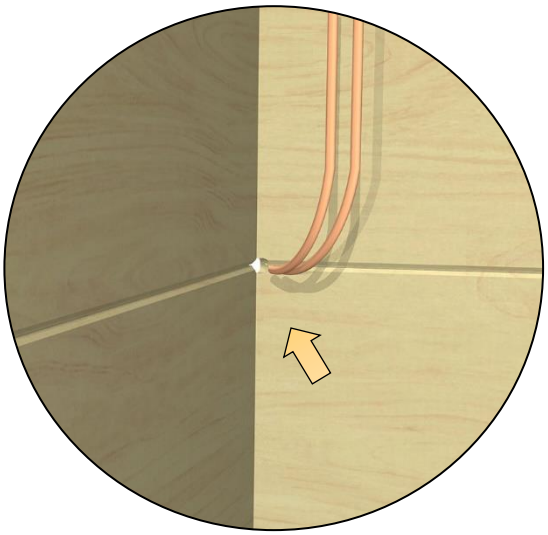

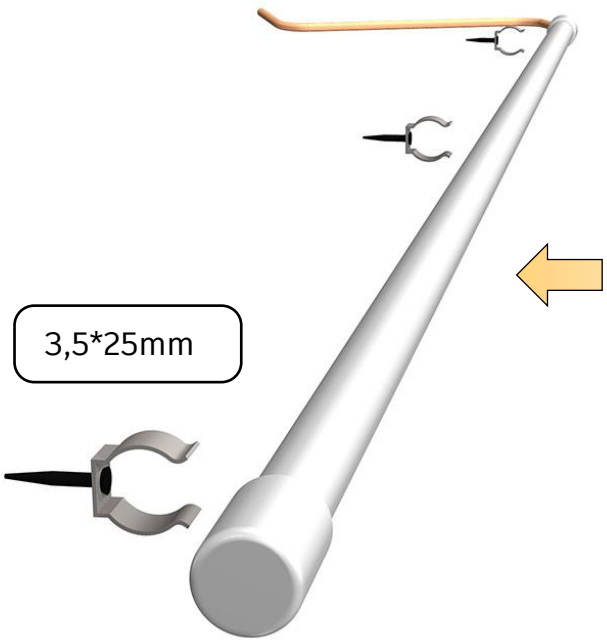
3,5*25mm

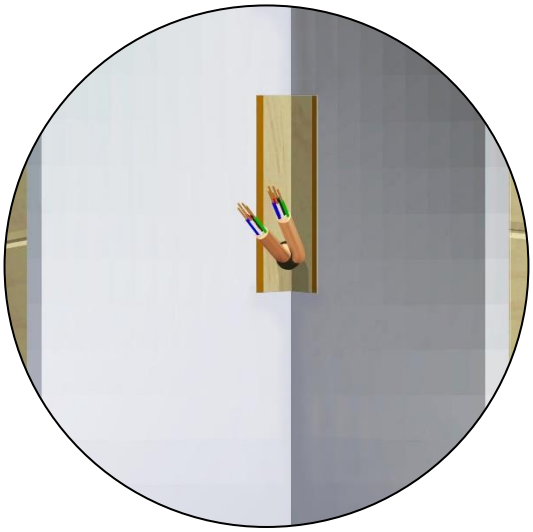

SAS21060T



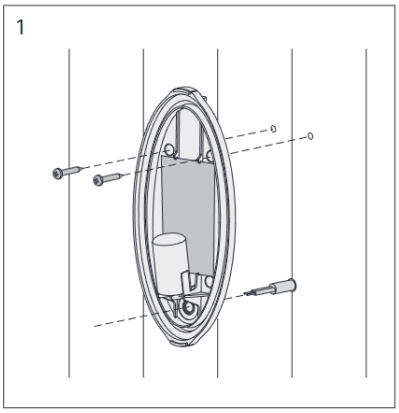
1

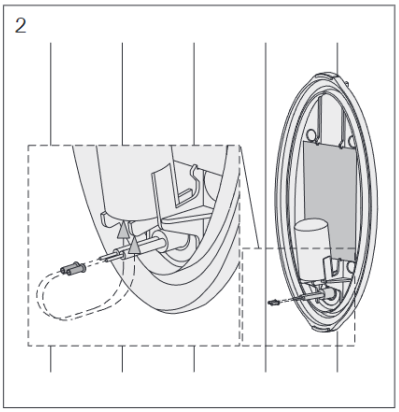
2

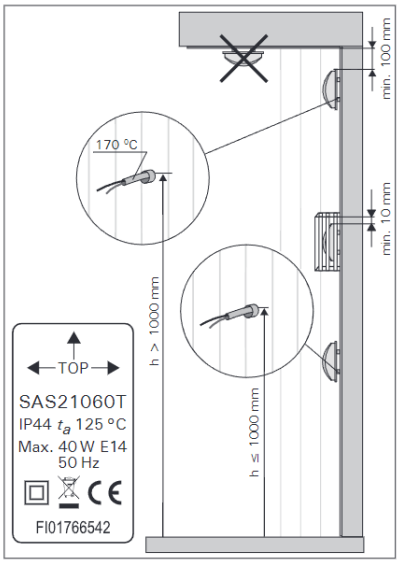
min. 100 mm
170 °C
min. 10 mm
h > 1000 mm
TOP
SAS21060T
IP44 t_a 125 °C
Max. 40 W E14
50 Hz
FI01766542
h ≤ 1000 mm

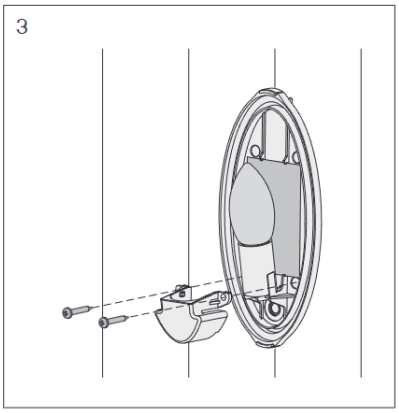
3

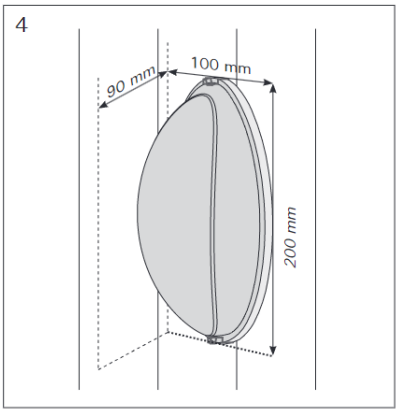
4
90 mm
100 mm
200 mm

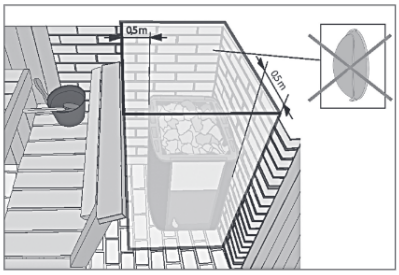
0,5m
0,5m

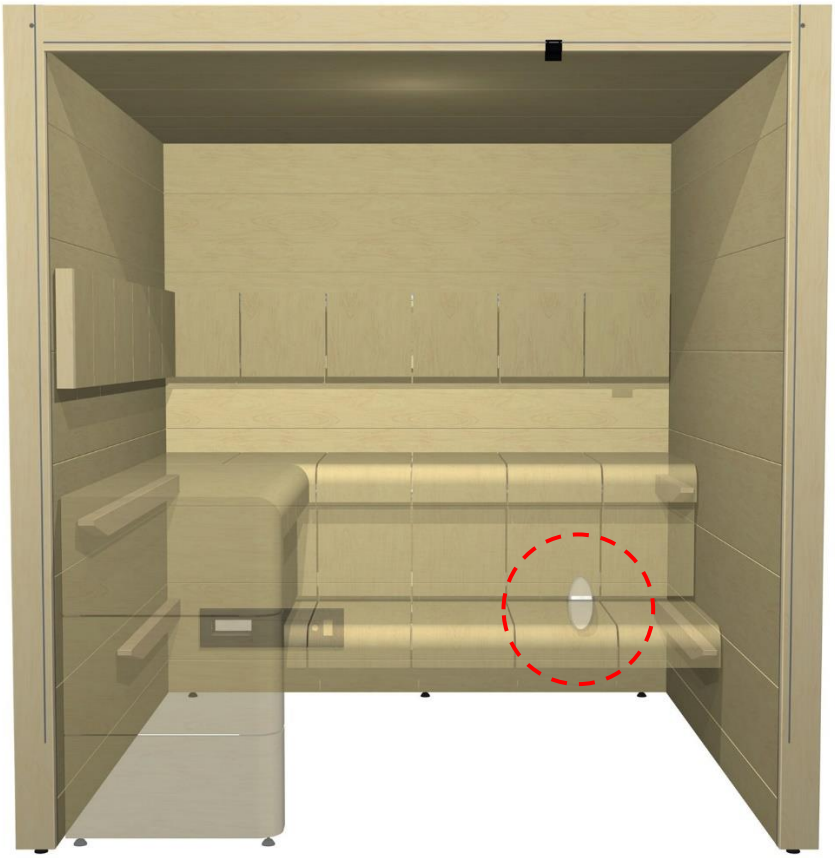

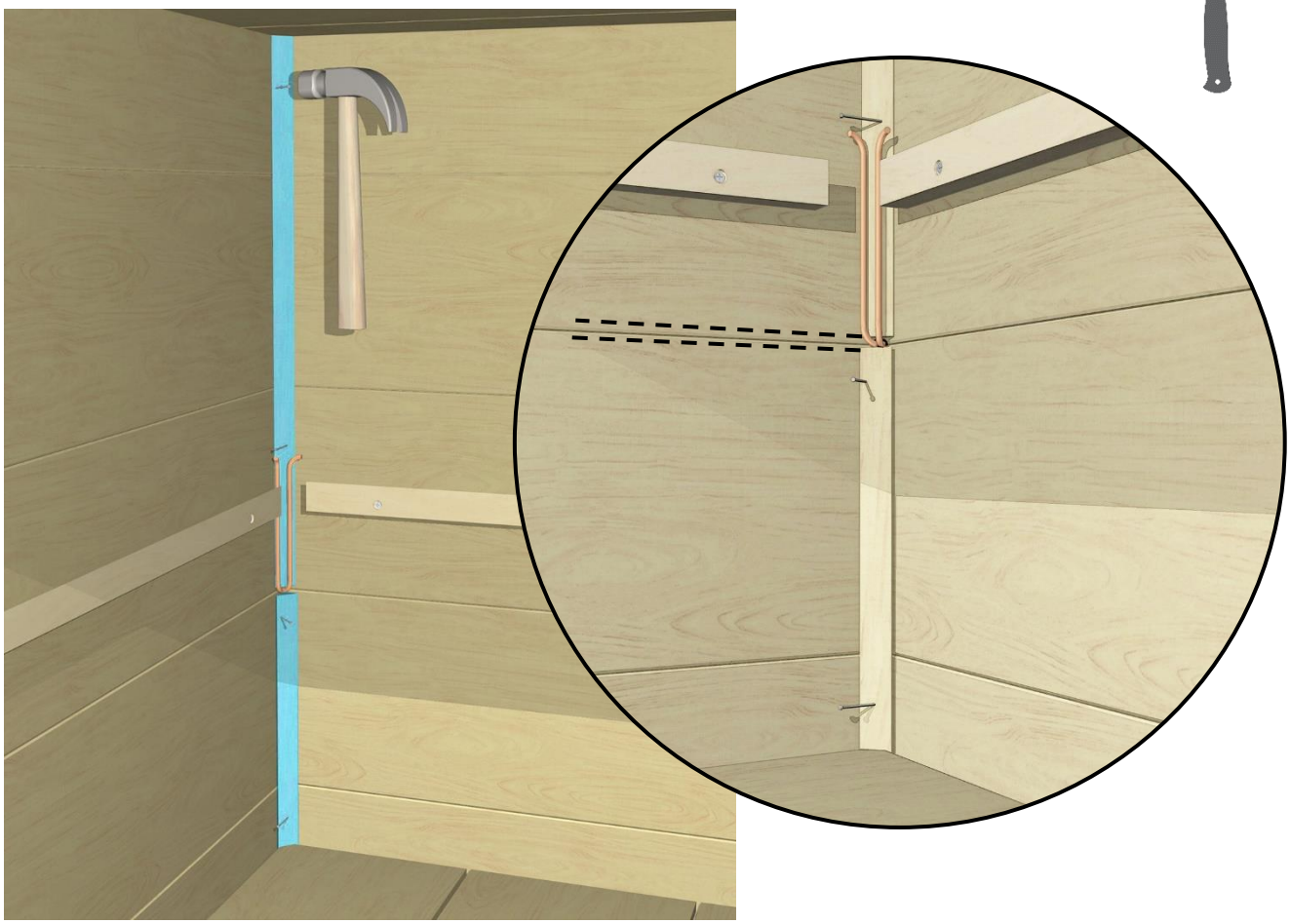

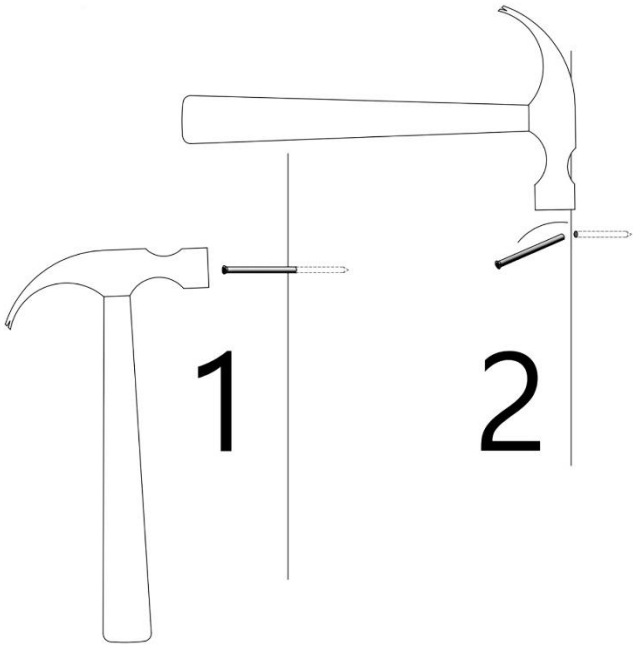
1
2

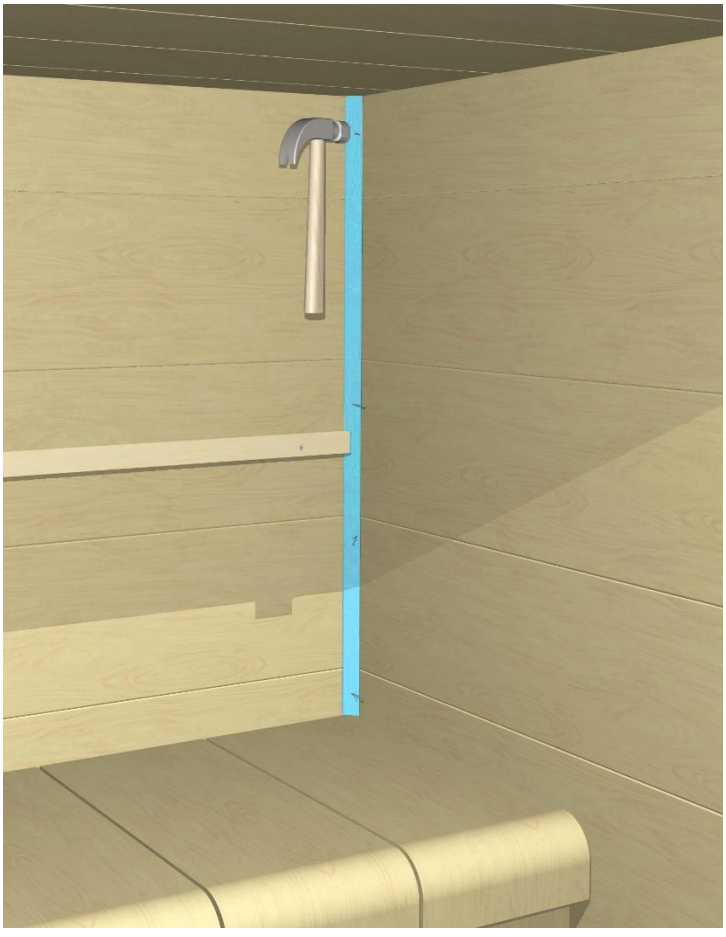

POSITION

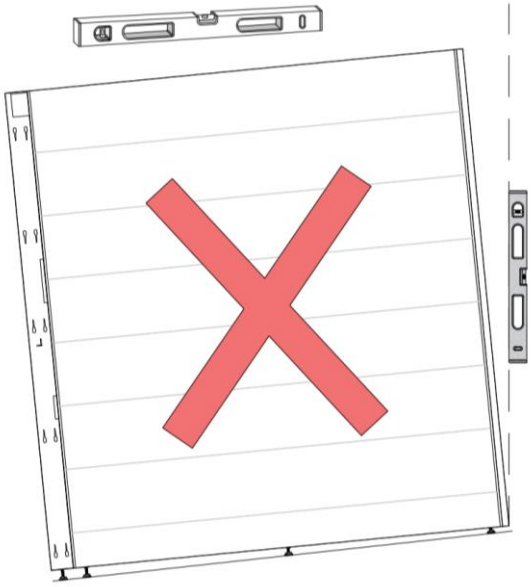

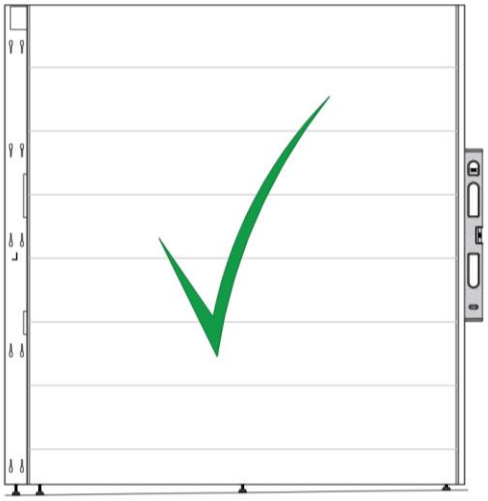

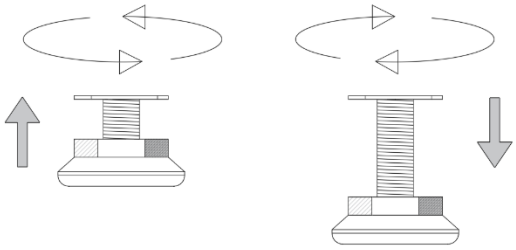

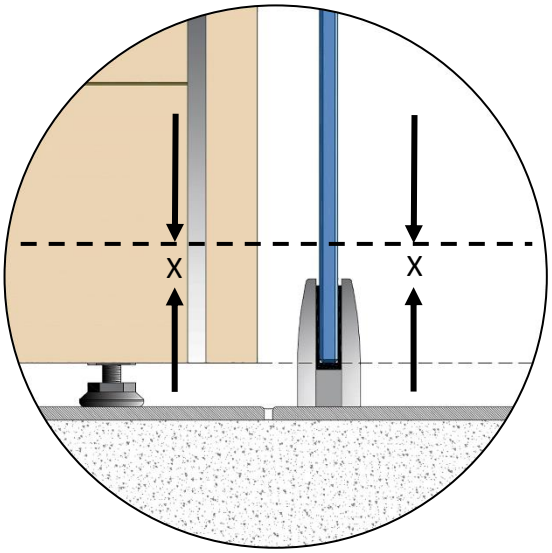

X = min 17mm – max 40mm



GLASS FRONT

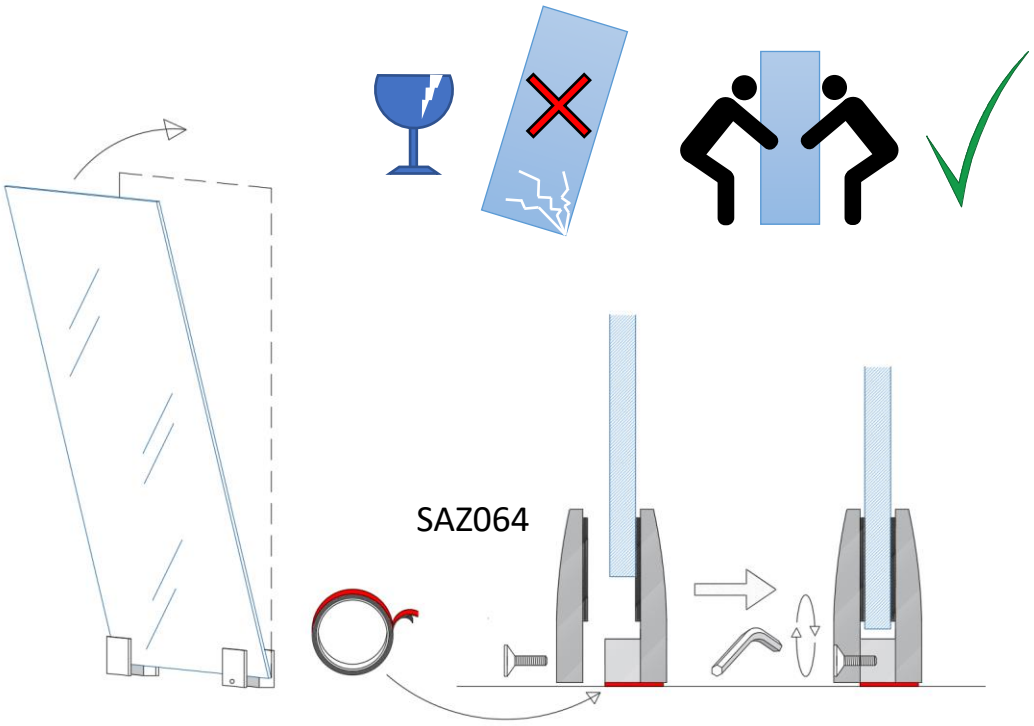
SAZ064


G2

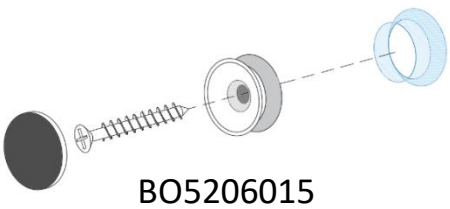
BO5206015


4,5*25mm
G1

ZVEL-501





SAZ0602













KT021
SAZ045

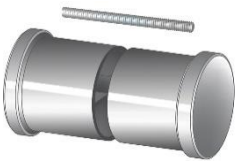

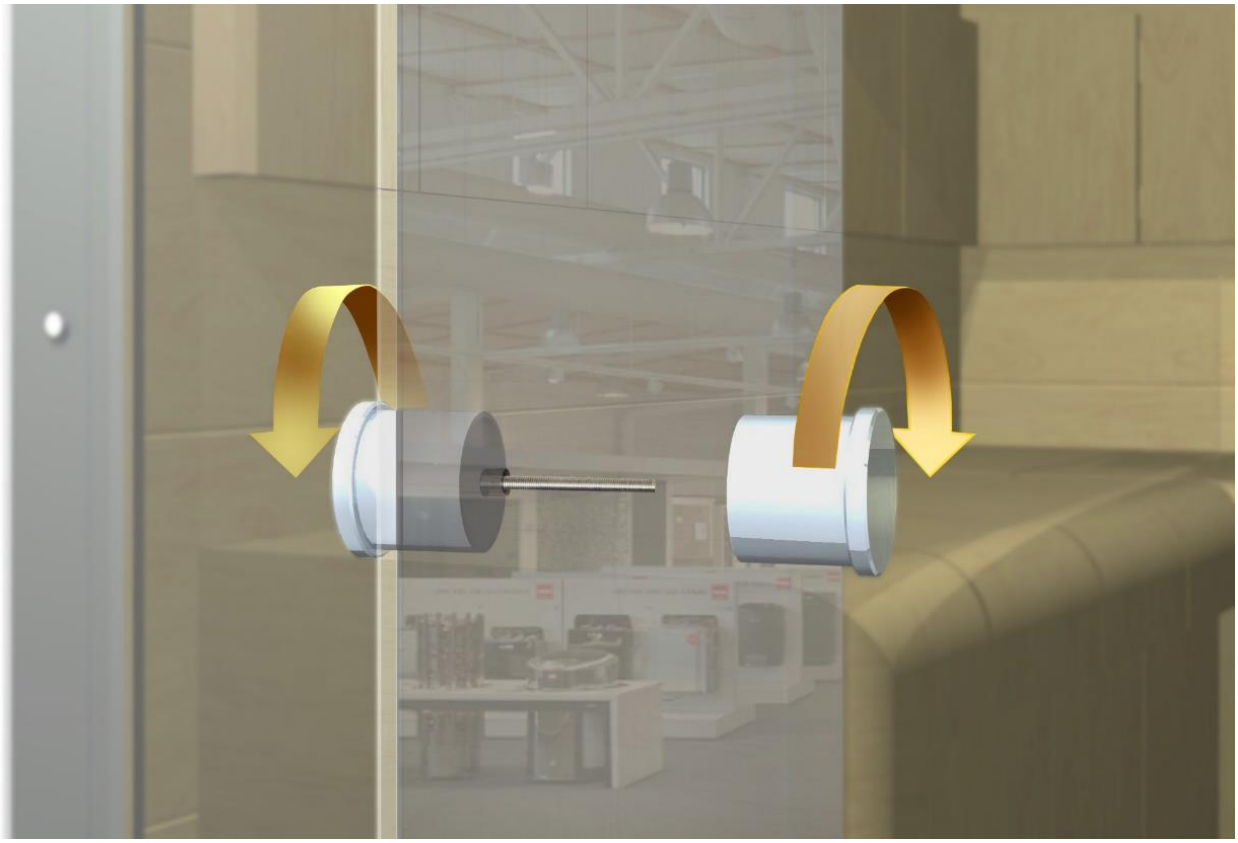

SAZ048KPL
ZVEL-500



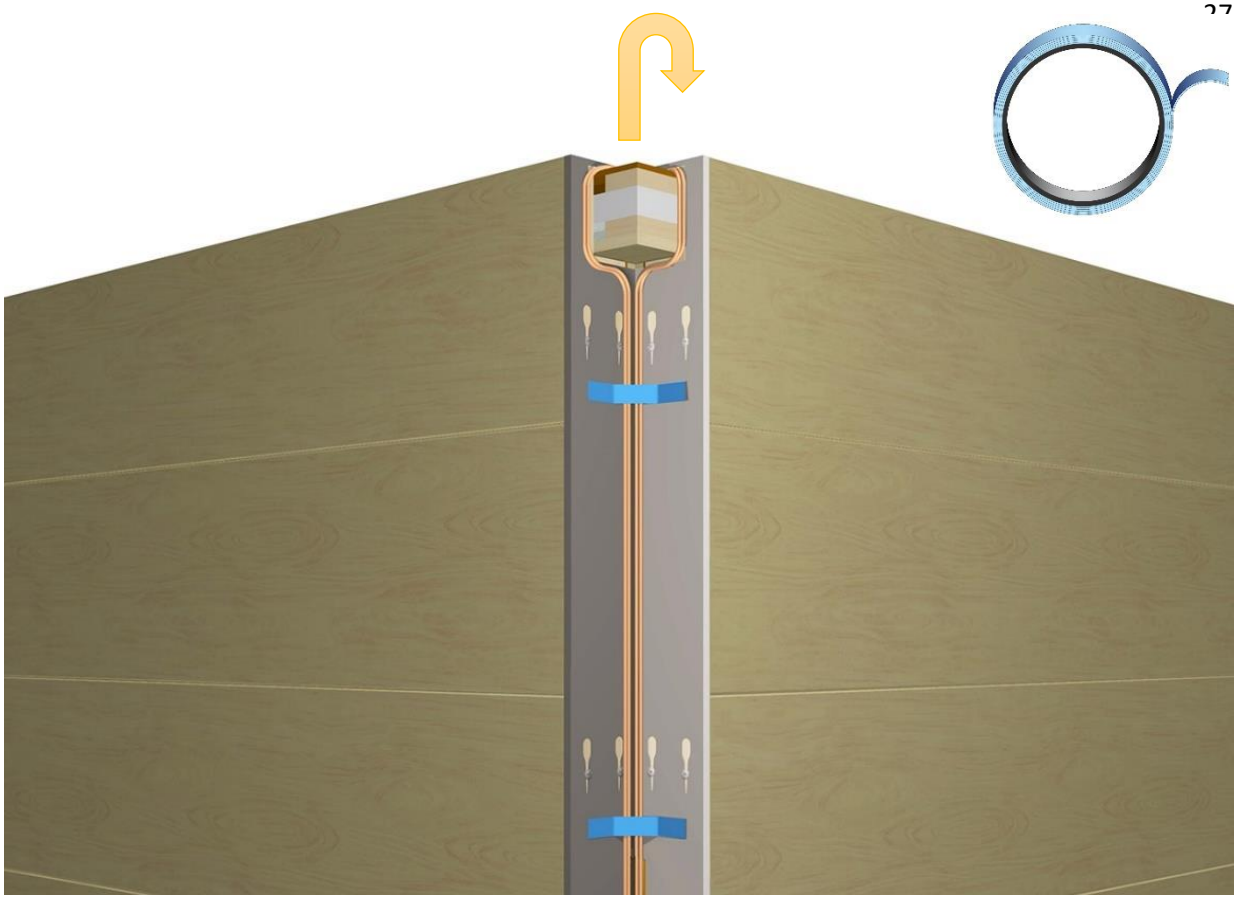

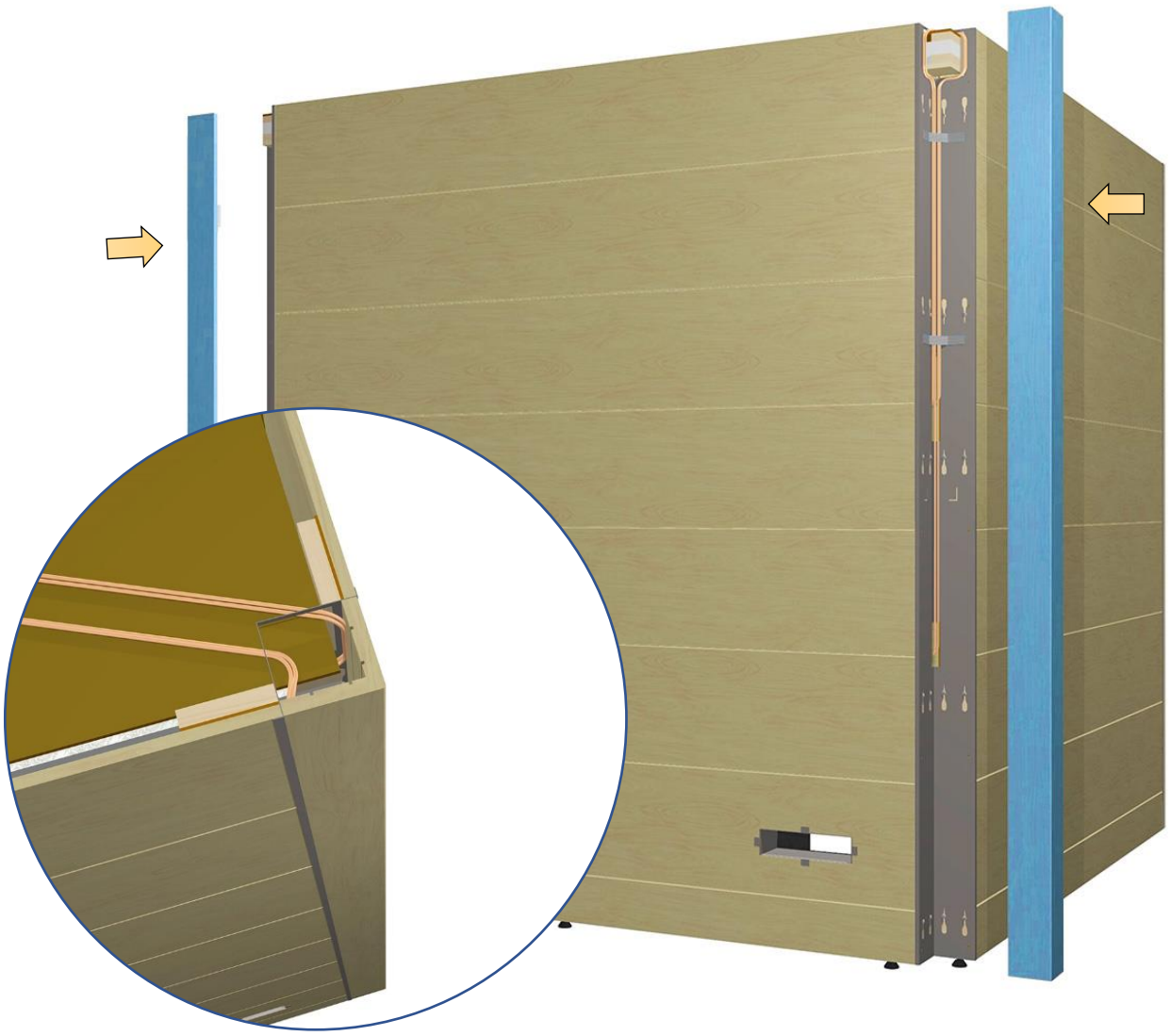

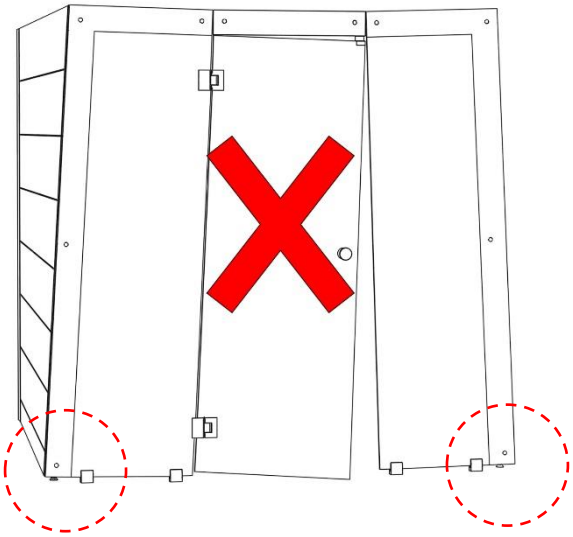

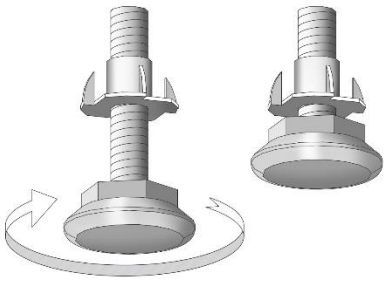

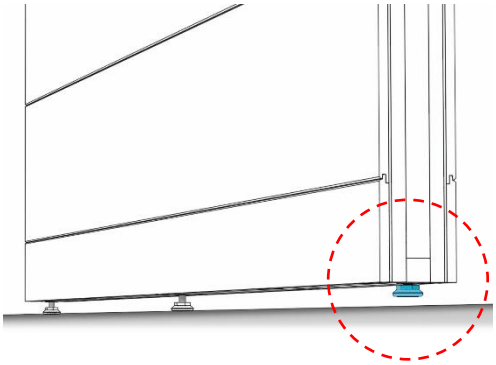

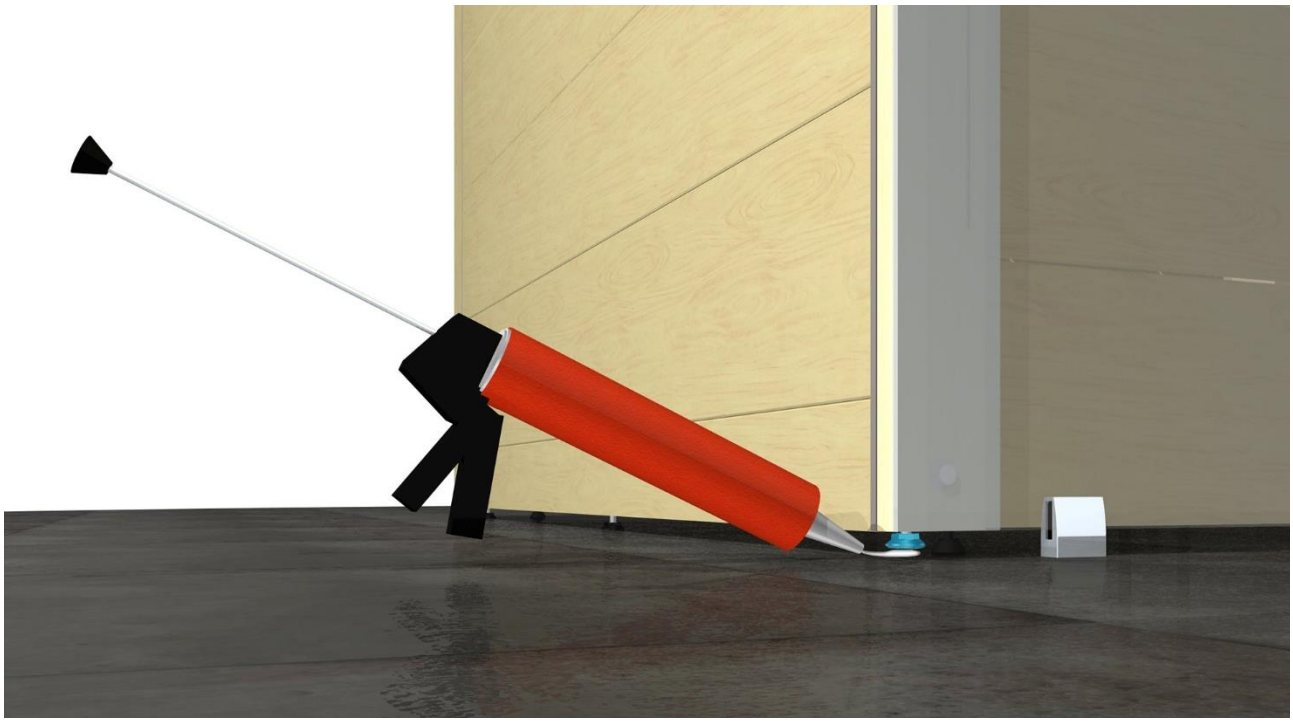

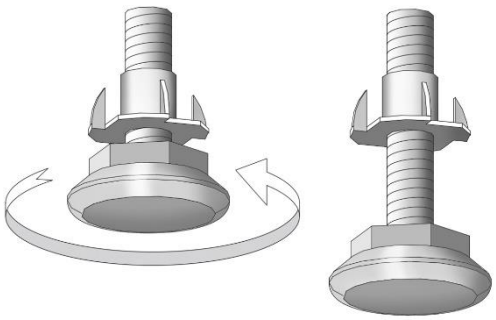

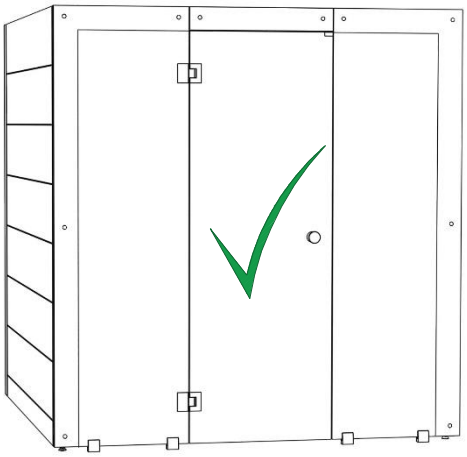

ELECTRICS

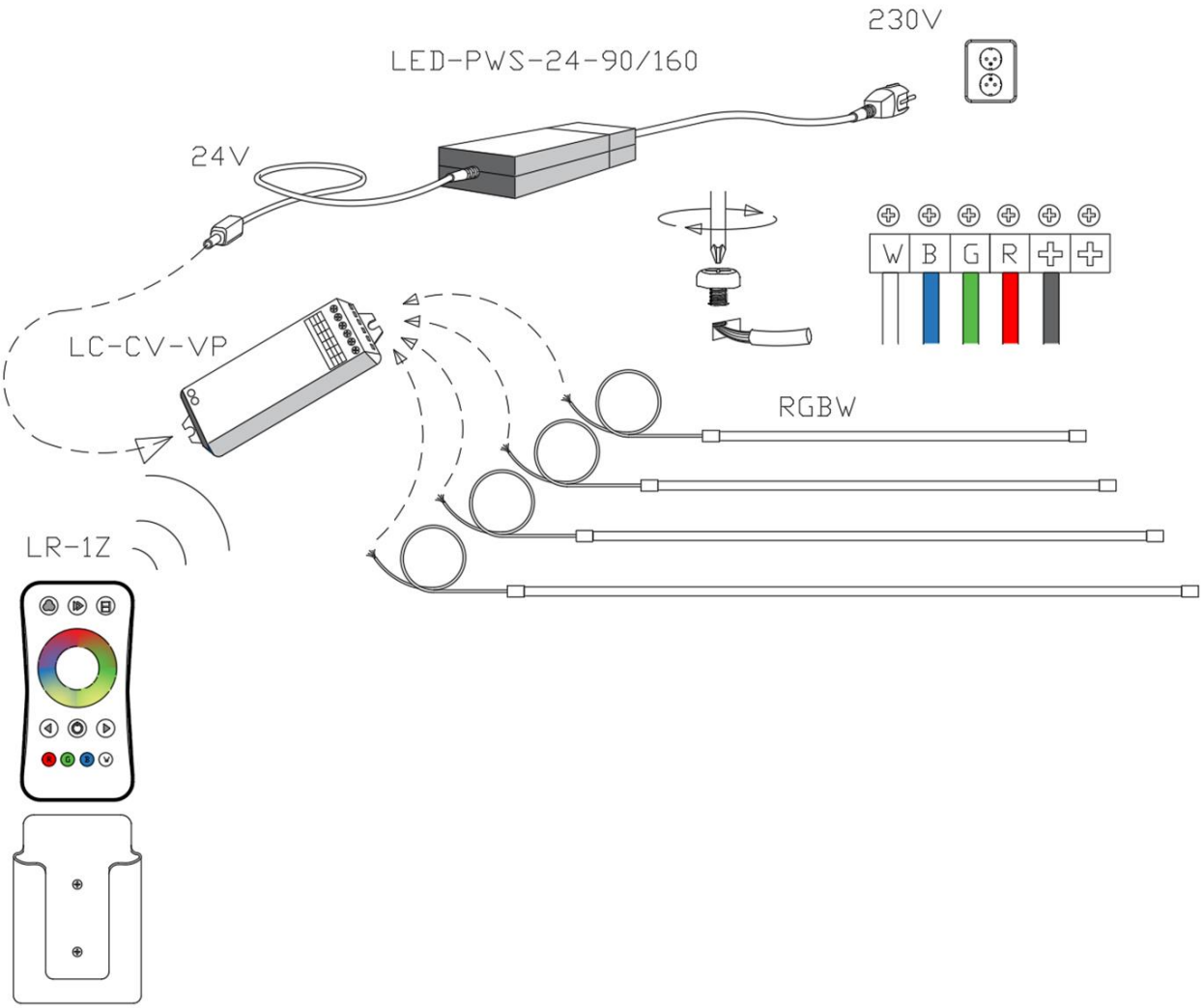

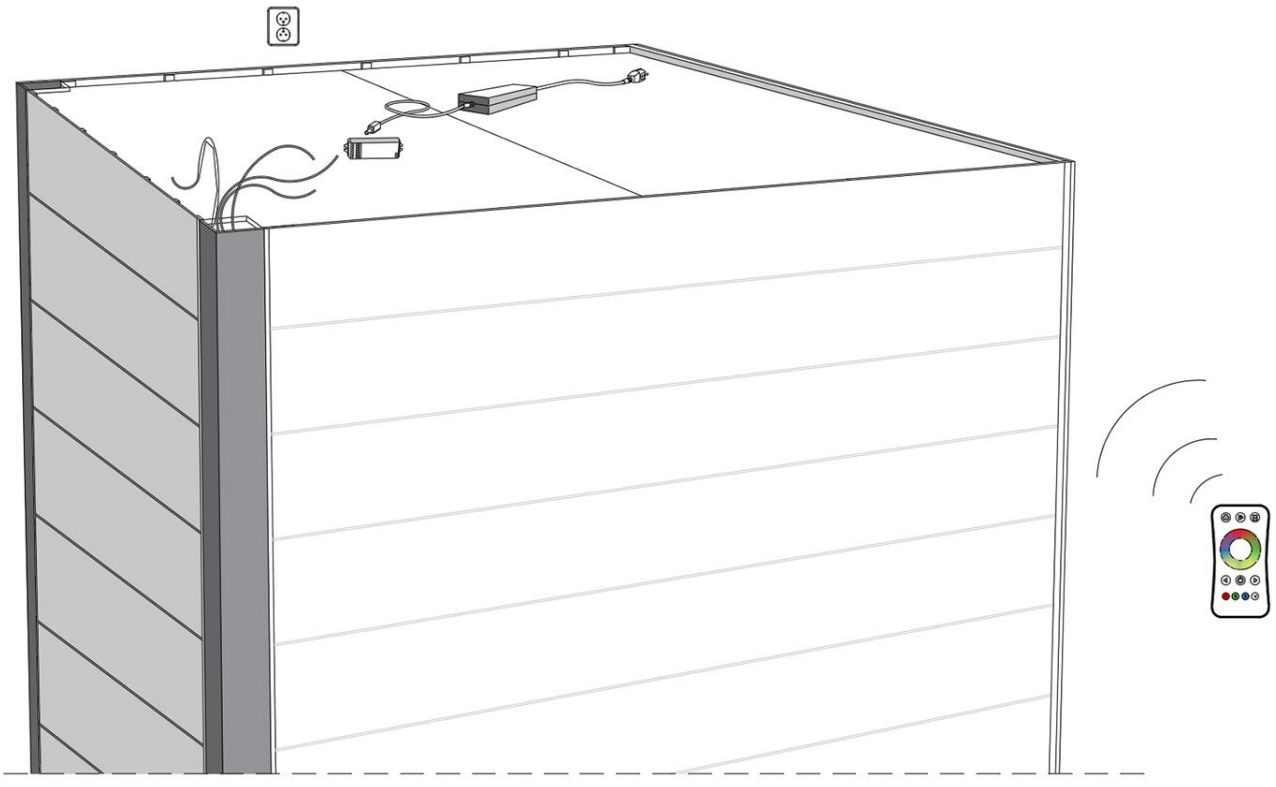

HEATER

