SIRIO
MODEL: S2942.2

TECHNICAL DRAWING

S2942P.2	S2942B.2	S2942SB.2	S2942BB.2
POLISHED	BRUSHED	SATIN BRASS	BRUSHED BRONZE

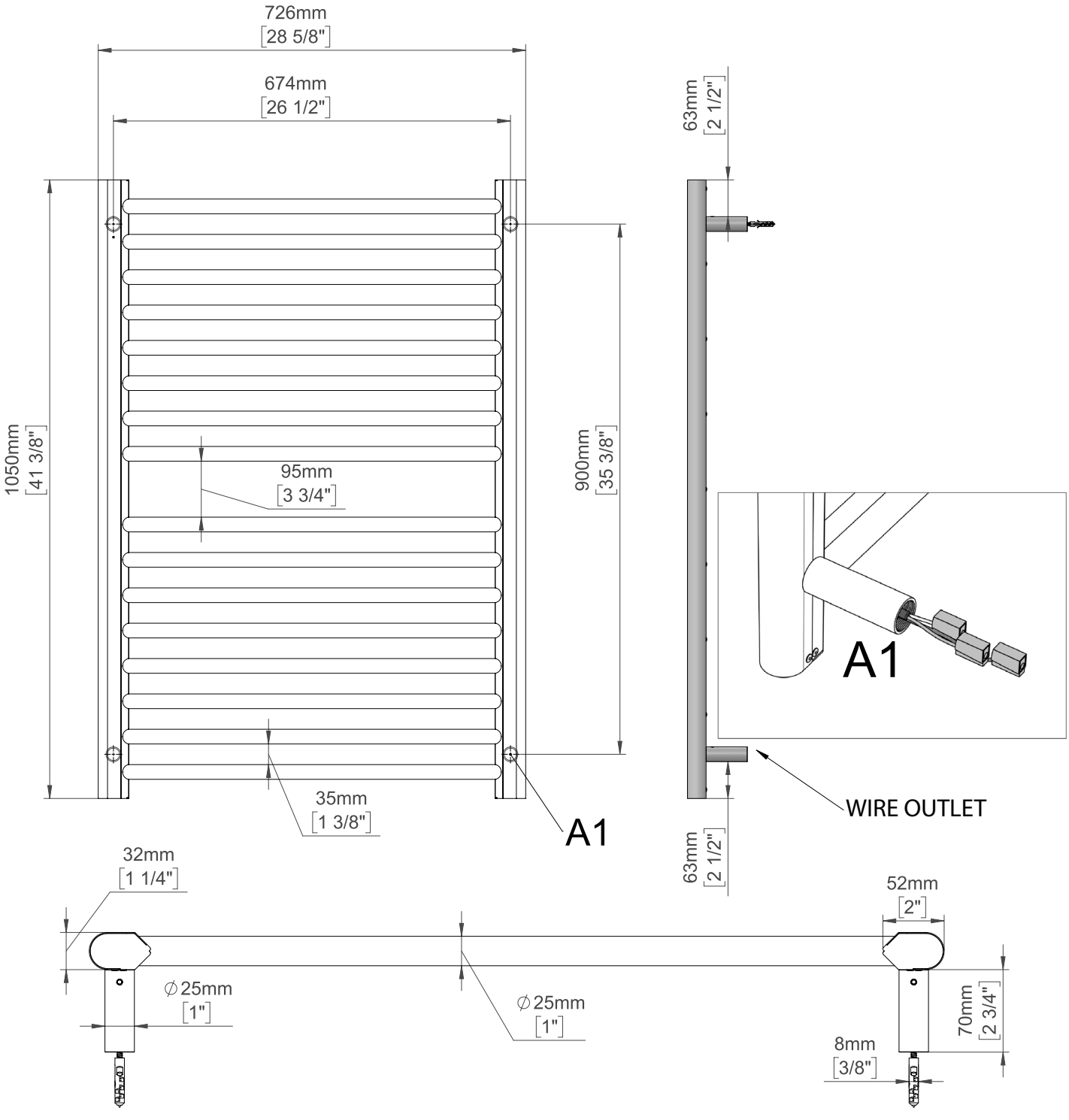

VOLTS:	**115**
WATTS:	**290**
AMPS:	**2.42**

Amba® HEATED TOWEL RACKS
www.ambaproducts.com

SIRIO
MODEL: S2132.2

TECHNICAL DRAWING

S2132P.2	S2132B.2	S2132SB.2	S2132BB.2
POLISHED	BRUSHED	SATIN BRASS	BRUSHED BRONZE

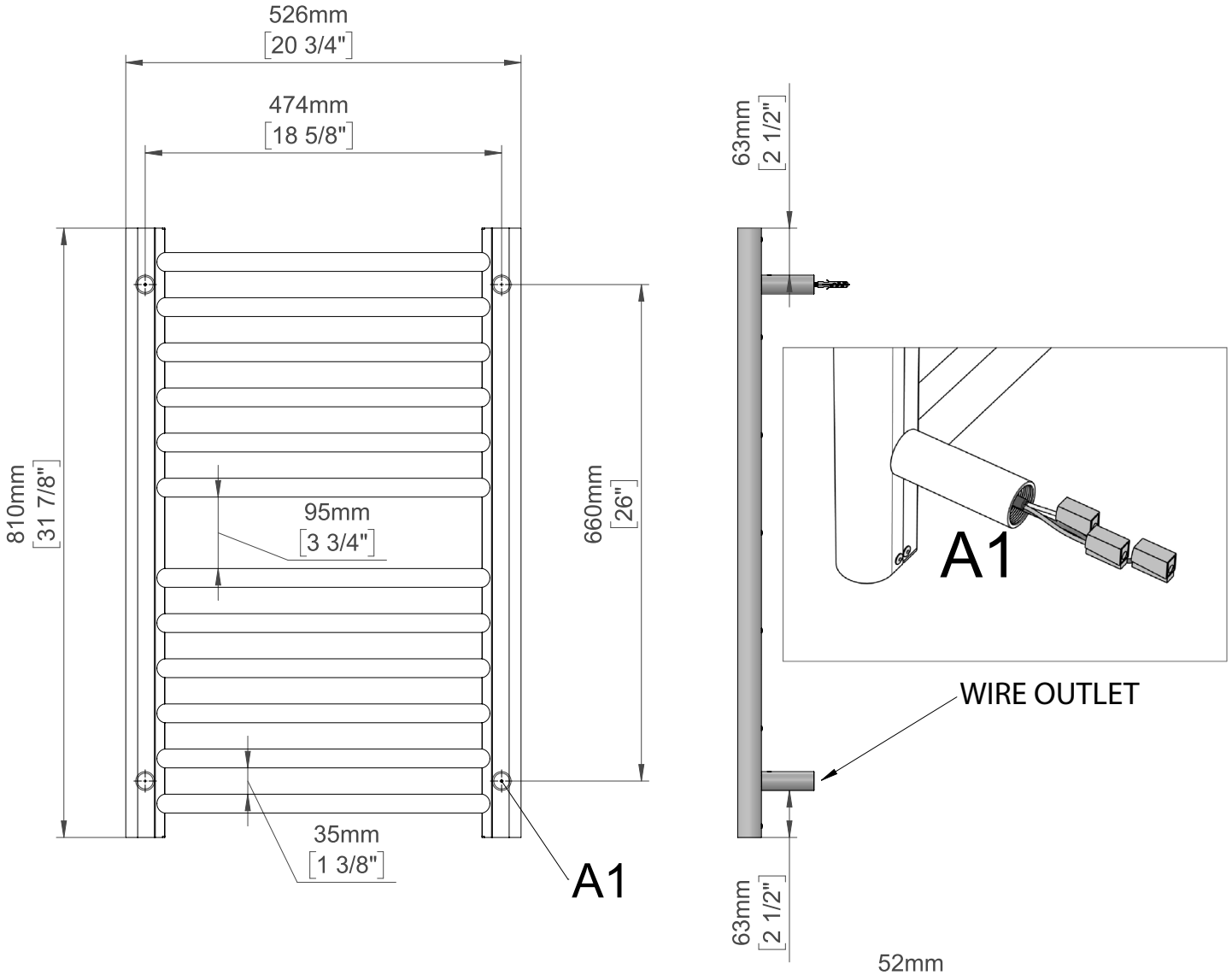

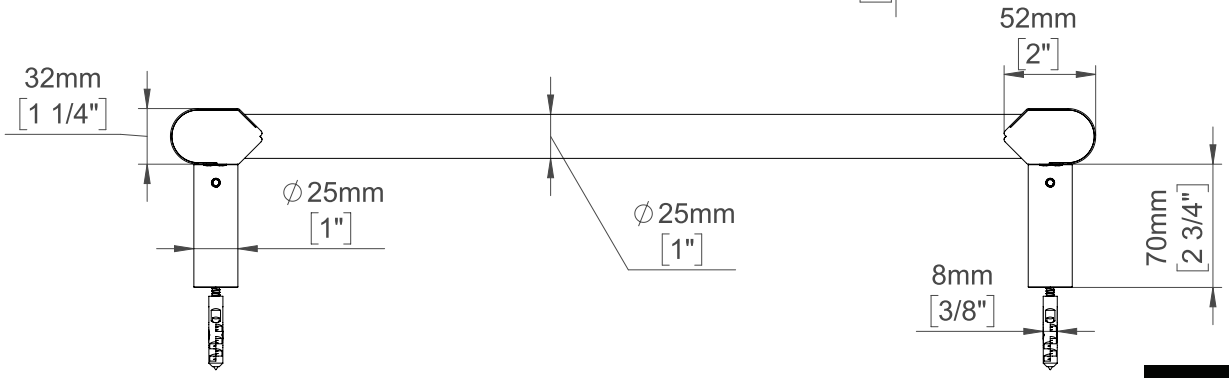

VOLTS:	**115**
WATTS:	**170**
AMPS:	**1.42**

Amba® HEATED TOWEL RACKS
www.ambaproducts.com

SIRIO
MODEL: S2142.2

TECHNICAL DRAWING

S2142P.2	S2142B.2	S2142SB.2	S2142BB.2
POLISHED	BRUSHED	SATIN BRASS	BRUSHED BRONZE

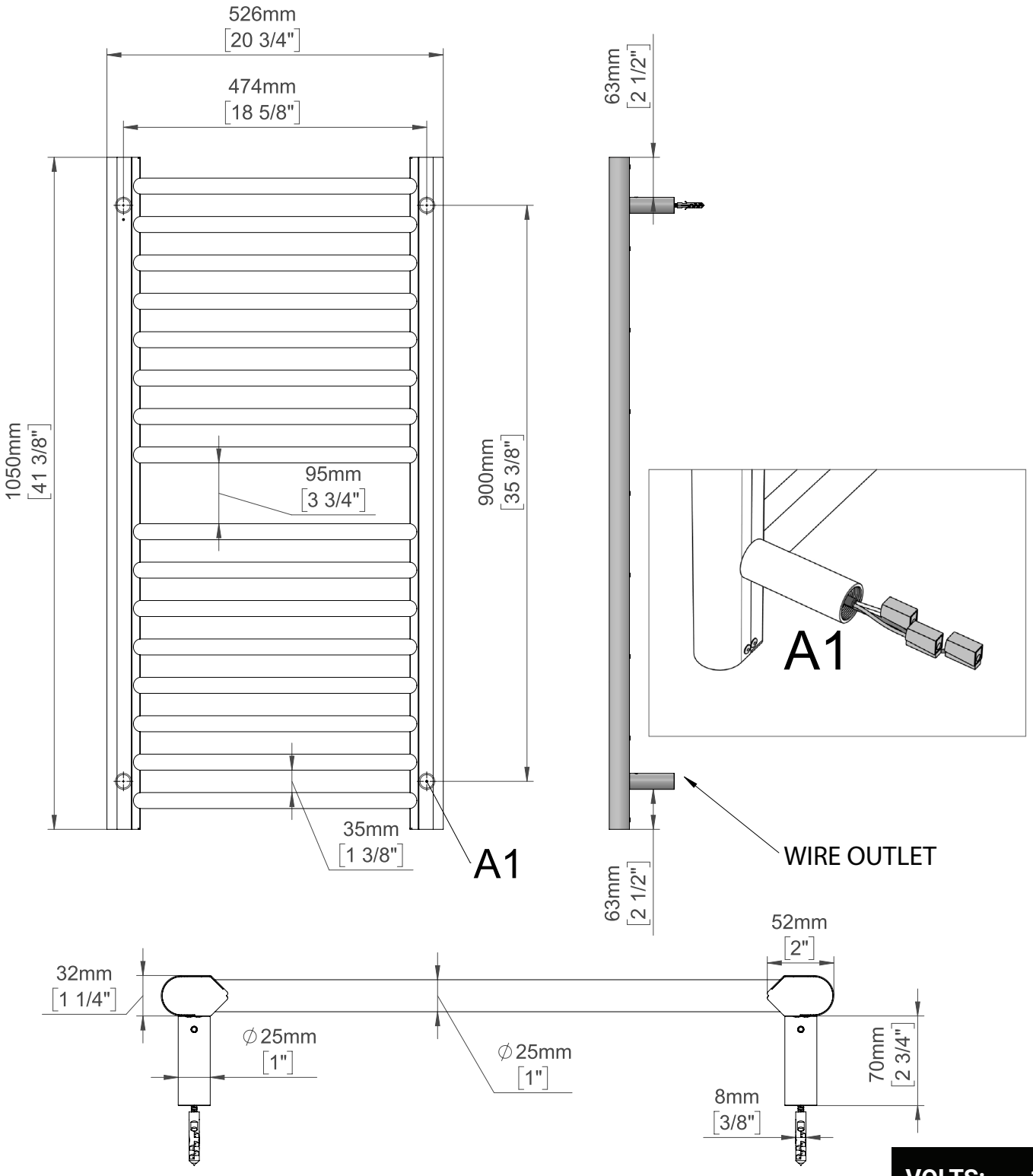

VOLTS:	**115**
WATTS:	**220**
AMPS:	**1.83**

Amba® HEATED TOWEL RACKS
www.ambaproducts.com

SIRIO
MODEL: S2932.2

TECHNICAL DRAWING

S2932P.2	S2932B.2	S2932SB.2	S2932BB.2
POLISHED	BRUSHED	SATIN BRASS	BRUSHED BRONZE

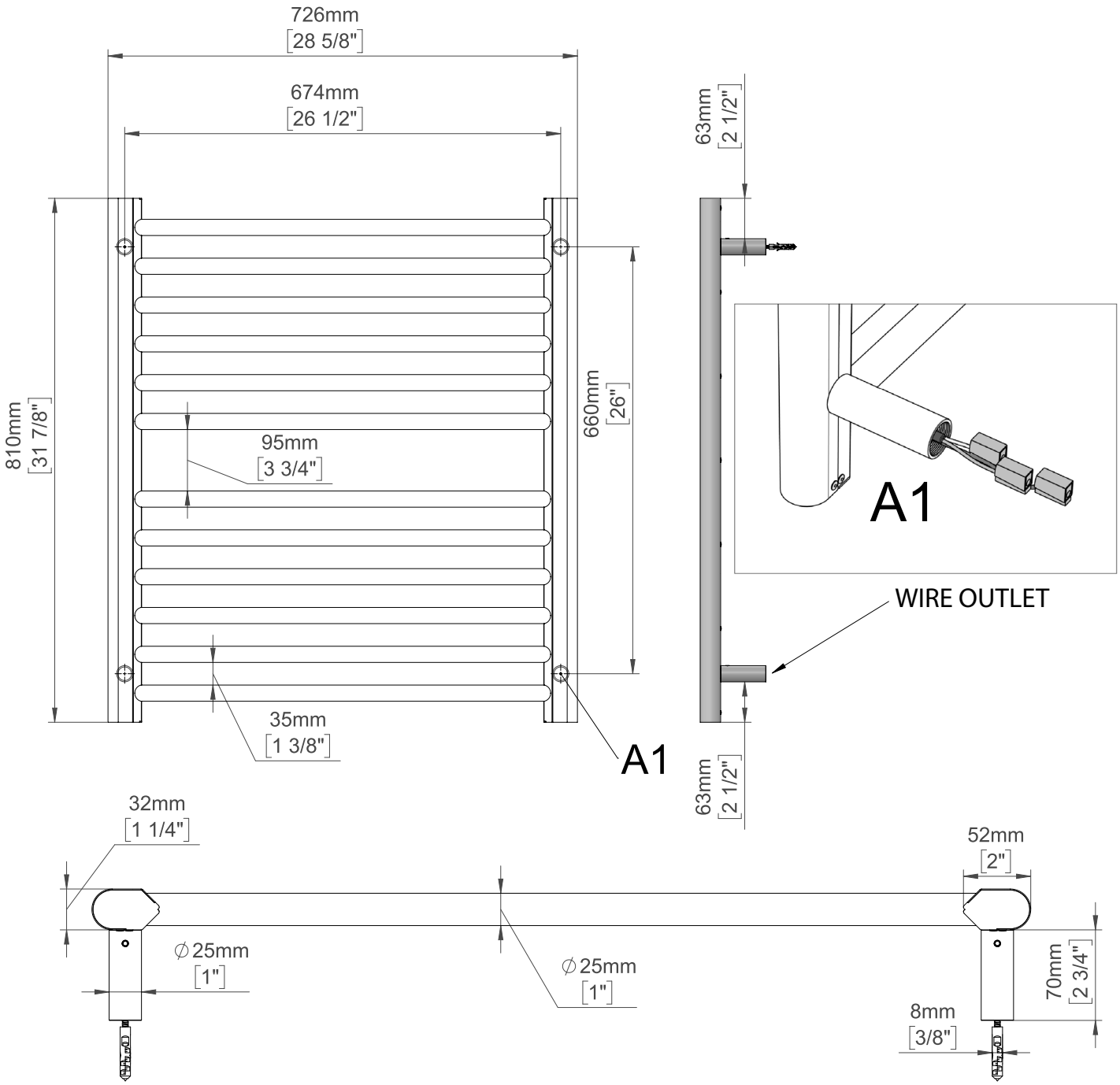

VOLTS:	**115**
WATTS:	**220**
AMPS:	**1.83**

Amba® HEATED TOWEL RACKS
www.ambaproducts.com